NATIONAL AERONAUTICS AND SPACE ADMINISTRATION

WORK COPY

DEPLOYMENT CRITERIA FOR LUNAR SURFACE EXPERIMENTS MISSION J-3 APOLLO 17

MANNED SPACECRAFT CENTER
HOUSTON, TEXAS

DEPLOYMENT CRITERIA FOR LUNAR SURFACE EXPERIMENTS

MISSION J-3

APOLLO 17

CONTENTS

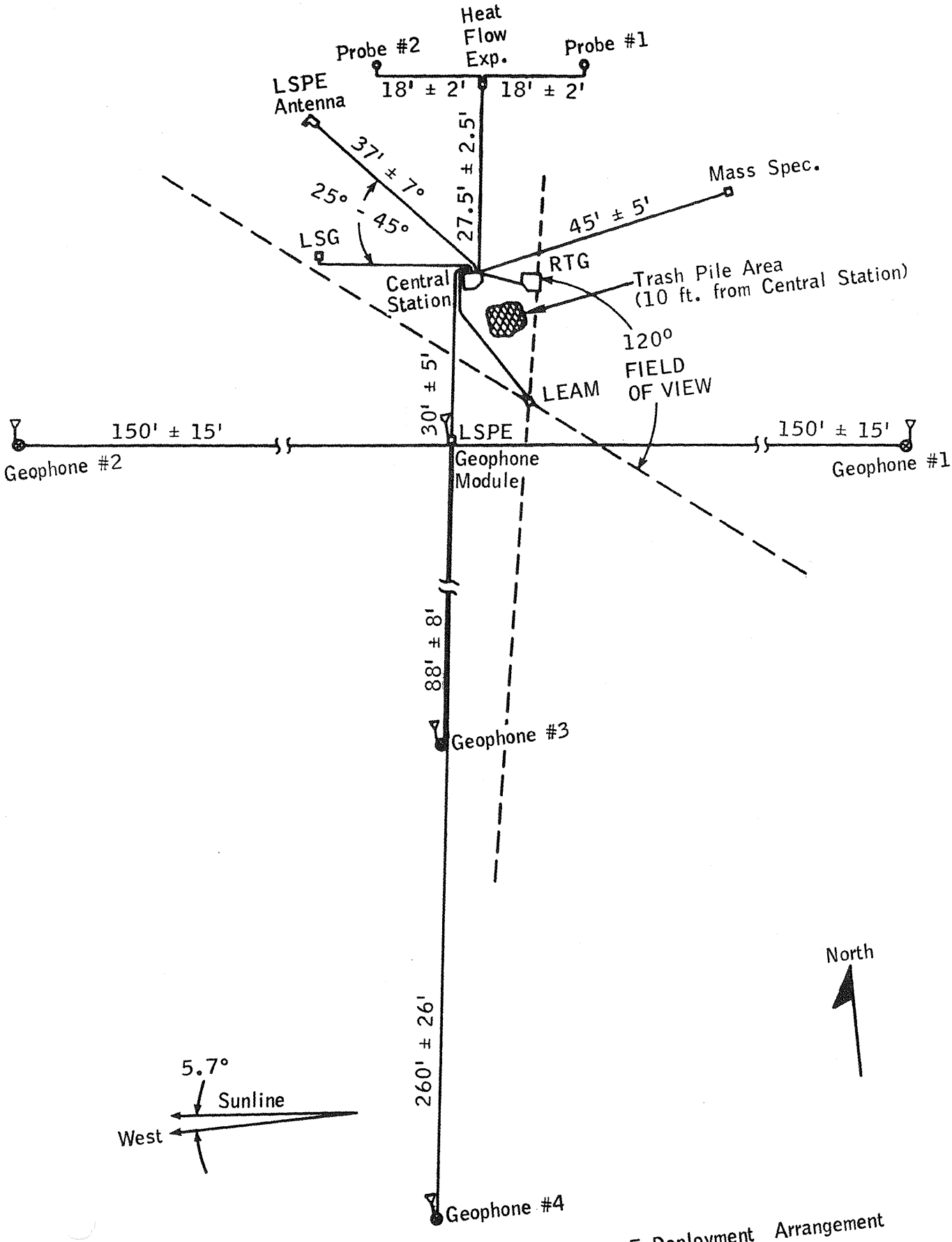

Figure 1 Apollo 17 ALSEP Array E Deployment Arrangement

DEPLOYMENT CRITERIA FOR ALSEP CENTRAL STATION

PARAMETER	CRITERIA
Central Station Site Selection	ALSEP deployment site should be a minimum of 300 feet west of LM with the carry handle side of Central Station facing north. ALSEP deployment area should be in direct sunlight and generally level, free from craters, boulders, and debris which might restrict view of space seen by thermal control surfaces. Central Station radiator requires clear field-of-view for good thermal control. See Figure 2. Subpackage #2, which includes the RTG, should be positioned 9 to 12 feet east of Central Station.
Leveling	While sun shield is still down in the stowed position, level unit within 5 degrees. When bubble is within the outer case circle of bubble level, the unit is level within 5 degrees. See Figure 3.
Alignment	Align Central Station within 5 degrees of the shadow line. Use the North partial compass rose. Align gnomon shadow with alignment decal. When aligned, open side of Central Station should face north. Shadow angle at deployment should be 6.9 degrees. Sun elevation angle should be 16 degrees and must be less than 45 degrees for proper use of the sun compass.

DEPLOYMENT CRITERIA

FOR

ALSEP CENTRAL STATION (Concluded)

PARAMETER	CRITERIA
Precautions	After the RTG has been connected to the Central Station by way of shorting plug switch, this plug should not be disconnected. If the circuit is broken, an undesirable switching function will occur within the Power Conditioning Unit. After Central Station deployment, do not bump or twist the sunshield. Damage to the lifting springs may result.

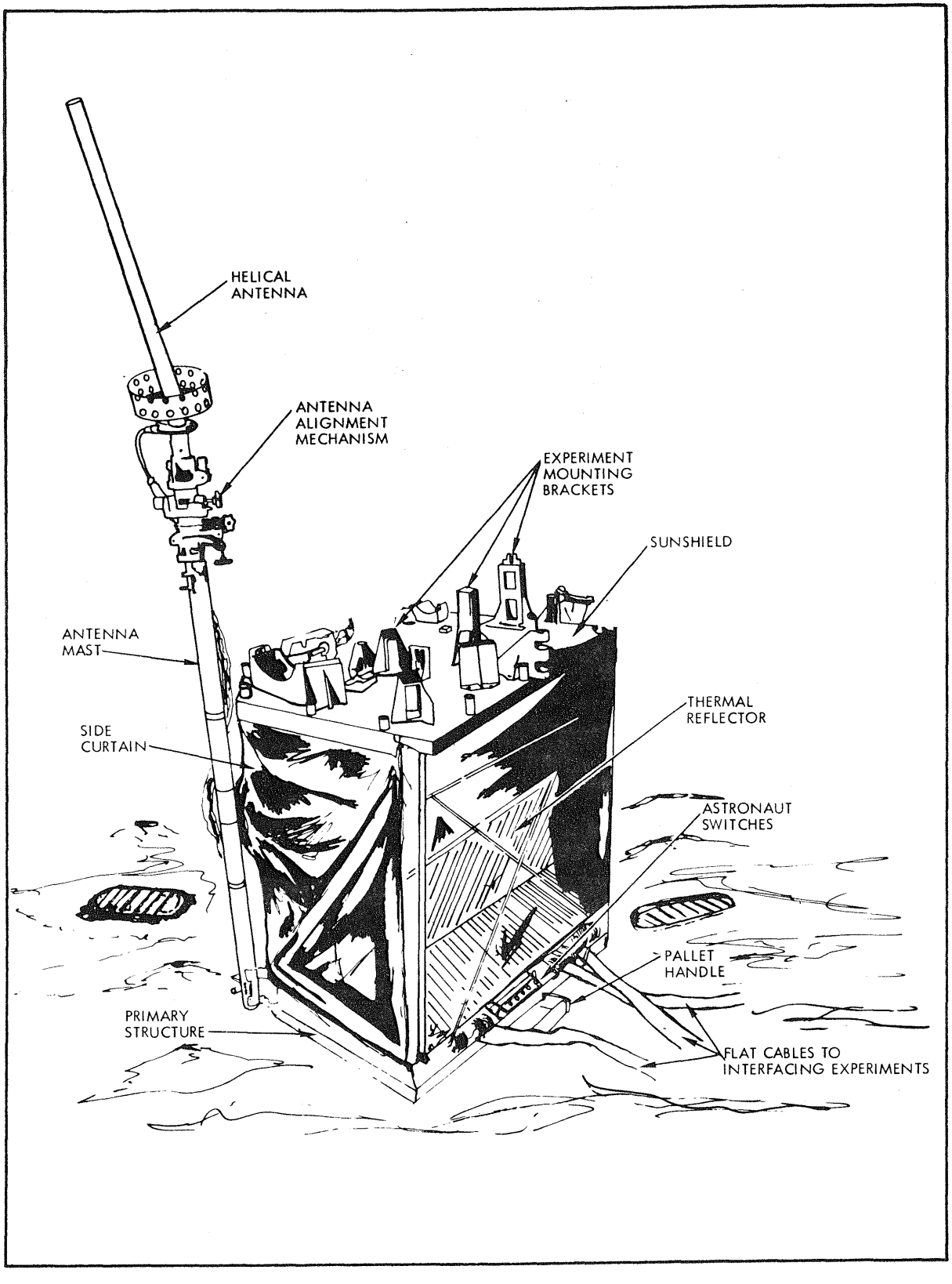

Figure 2 Apollo 17 ALSEP Array E Central Station

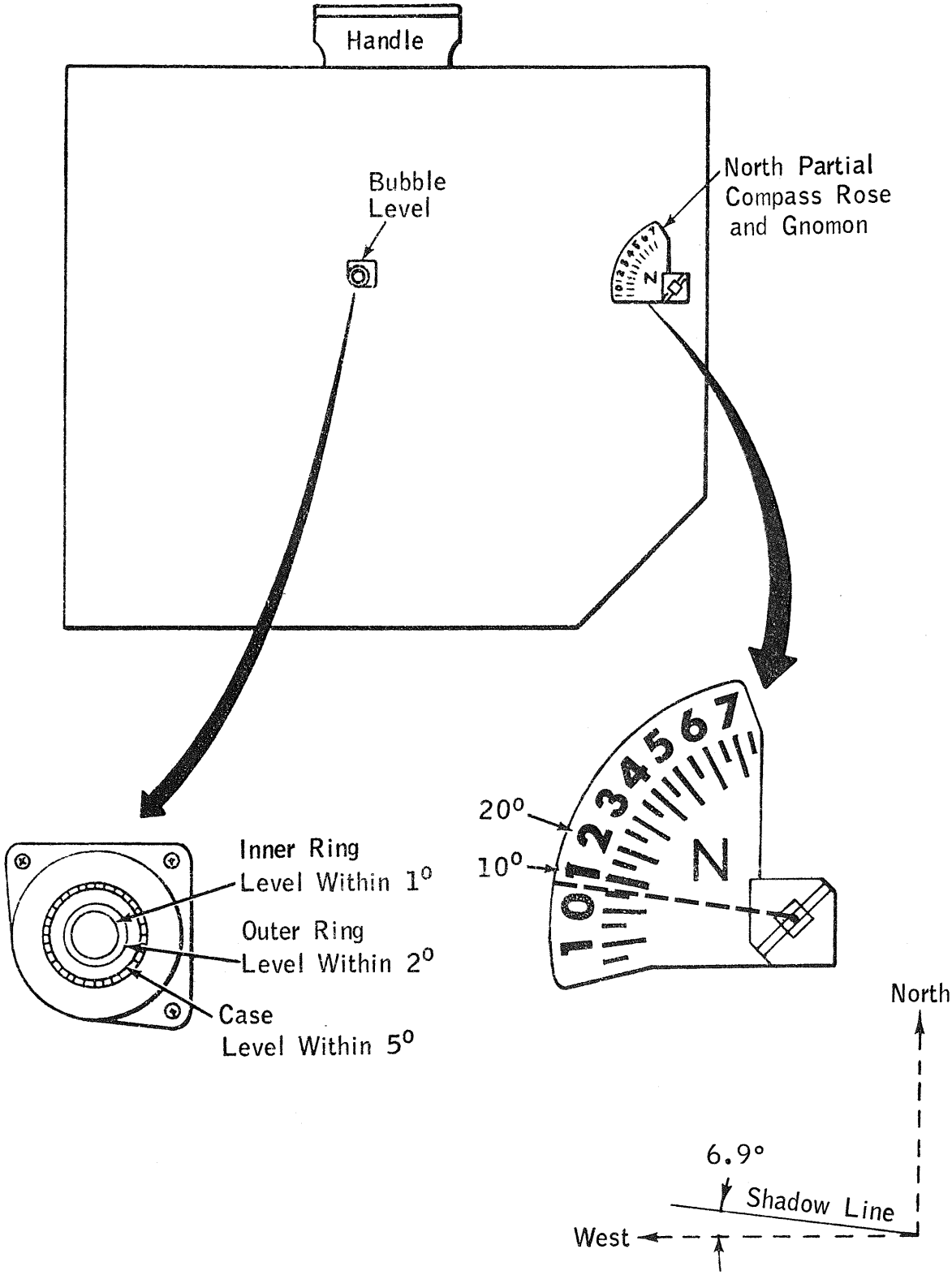

Figure 3 Central Station Leveling and Alignment

ALSEP CENTRAL STATION ANTENNA DEPLOYMENT CRITERIA

PARAMETER	CRITERIA
Antenna Emplacement	With the antenna mechanism still in stowage container, position the antenna aiming mechanism on the mast with the arrow pointed toward the sun. This will ensure that the latitude adjustment will tilt the antenna toward the equator. Verify that antenna is properly seated in Central Station fixture.
Latitude Setting	Verify that latitude dial is set to value shown on cuff check list to assure adequate signal strength for life of ALSEP. Coarse Scale: 2 Fine Scale: 0.2
Longitude Setting	Verify that longitude dial is set to value shown on cuff check list to assure adequate signal strength for life of ALSEP. Coarse Scale: Just over 3 Fine Scale: 0.8
Leveling	Level antenna within $\pm\frac{1}{2}$ degree as indicated by tubular bubble levels. Bubbles should be centered between scribe marks to be level within $\frac{1}{2}$ degree. See Figure 4.
Alignment	Align antenna with the sun line using the sun dial. When shadow of gnomon covers the shadow reference block, the antenna is aligned within $\pm\frac{1}{2}$ degree and generally pointed toward the earth.

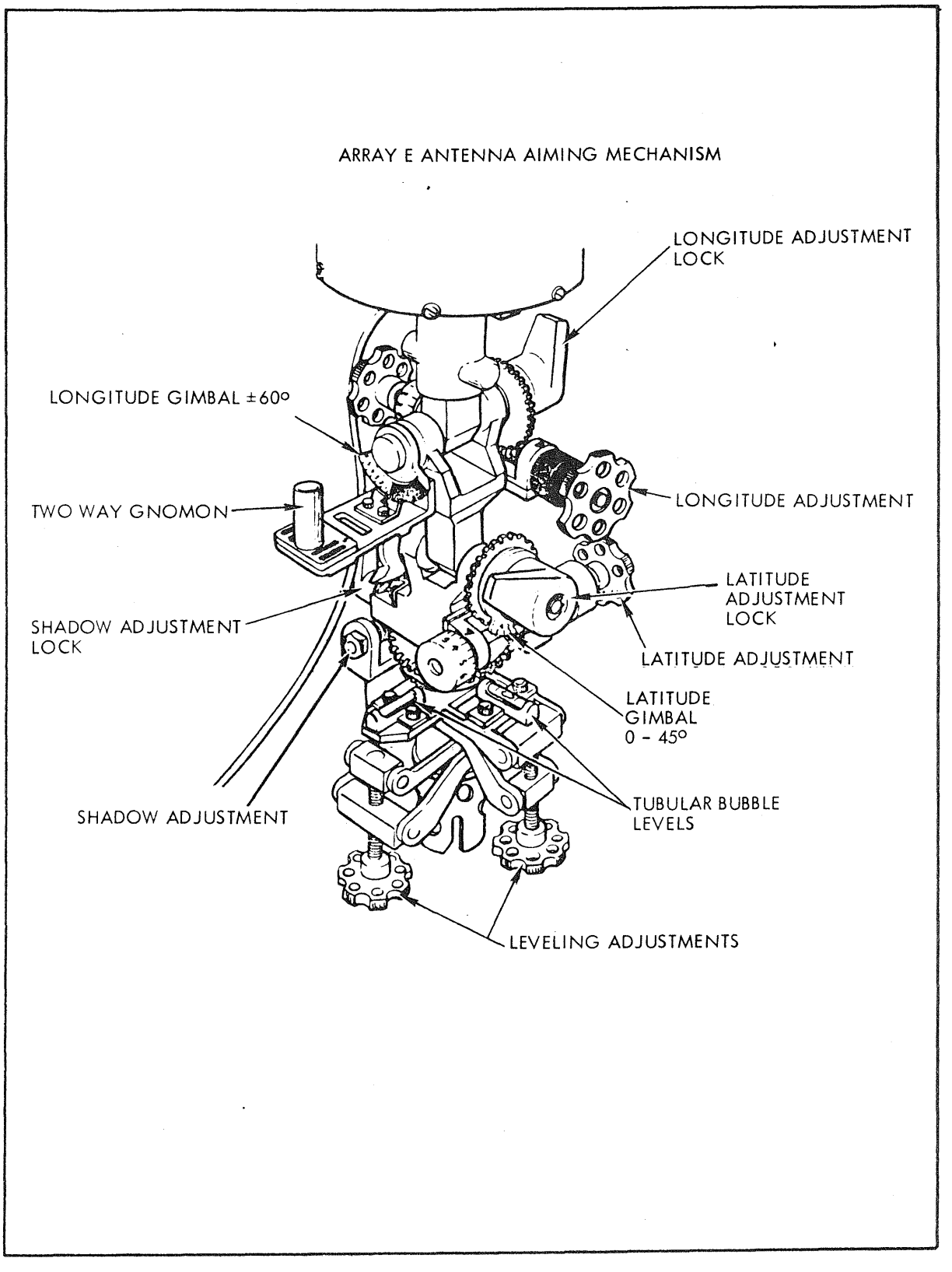

Figure 4 Apollo 17 ALSEP Antenna Aiming Mechanism

RADIOISOTOPE THERMOELECTRIC GENERATOR DEPLOYMENT CRITERIA

PARAMETER	CRITERIA
RTG Emplacement	RTG (Subpackage #2) should be deployed 9 to 12 feet due east of Central Station. Separation is limited by 13-foot cable. Hot RTG should be separated from Central Station as far as possible to provide maximum heat radiation into free space and to provide safety factor for astronauts working around Central Station (Subpackage #1).
Leveling	RTG pallet should be as level as possible, determined visually by astronaut, since there are no mechanical provisions for leveling. Avoid craters and slopes which would impede heat dissipation from RTG fins.
Alignment	Align Subpackage #2 so that the cable exit from the RTG points toward the Central Station. Use care to avoid damage to RTG fins. After the RTG cable has been unreeled toward the Central Station, report to MCC the reading of the ammeter on the shorting switch box. Verify a reading greater than zero. See Figure 5. When shorting switch has been actuated, read ammeter again and verify that ammeter reading has deflected left to zero. Report this reading to MCC.

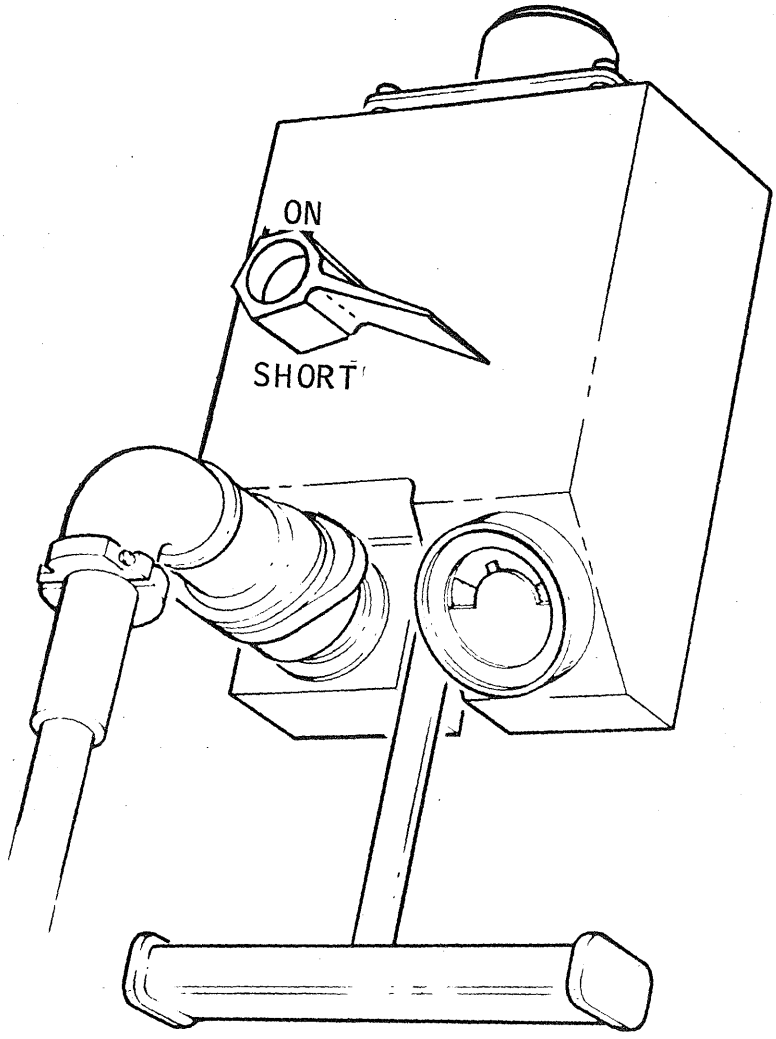

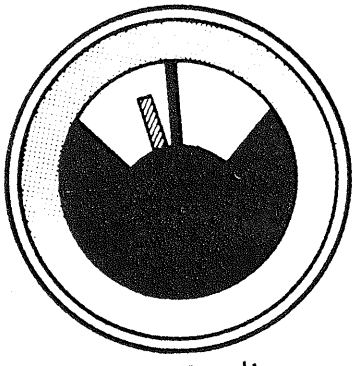

Normal Reading -
RTG Short-Circuited

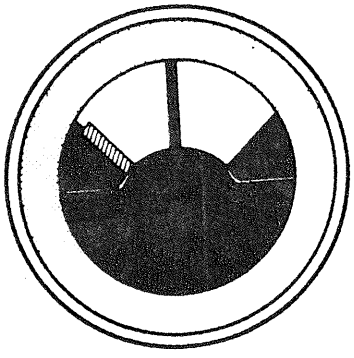

Normal Reading -
RTG Short Removed

Figure 5 RTG Current Indicator

HEAT FLOW EXPERIMENT DEPLOYMENT CRITERIA

PARAMETER	CRITERIA
HFE Electronics Package Site Selection	Deploy the HFE Electronics Package 7.5 to 9 meters (25 to 30 feet) due north of Central Station (ALSEP Subpackage #1). Distance is limited by a 9-meter (30-foot) cable. HFE Electronics Package should be placed in an approximately level area, removed from any surface irregularities or rocks that may obscure the field-of-view of the sunshield reflector.
Electronics Package Alignment	Align the HFE Electronics Package so that the shadow cast by the UHT on the partial compass rose falls within 5 degrees of the Shadow Line decal. See Figure 6. Radiator must face north away from equator and the Central Station. Boyd bolts must be removed so that they will not fall into radiator. Alignment of HFE package is accomplished by rotating package until shadow cast by UHT covers alignment decal.
Electronics Package Leveling	Level the HFE Electronics Package to within ± 5 degrees for maximum utilization of the thermal sunshield utilizing the bubble level. Bubble should be free from case circle to be within 5 degrees.
HFE Probe Deployment	Deploy the probes 5 meters (16 to 18 feet) east and west of the electronics package along the sun line. The two bore holes must be a minimum of 9 meters (30 feet) apart. Probe separation is limited by length of cables. Probe cable positioning must be known. The nearest HFE probe must be 6 meters (20 feet) minimum from the LACE (mass spectrometer), 9 meters (30 feet) minimum from the RTG, 9 meters (30 feet) minimum from the LSPE antenna, and at least 3 meters (10 feet) from all other experiments.
Drill HFE Bore Holes with Apollo Lunar Surface Drill (ALSD)	Use the ALSD to drill the two HFE bore holes at least 2.44 meters deep with at least 9 meters (30 feet) between the two bore holes. The bore holes should be straight enough that the HFE probes, when inserted in the bore stem casings, are within 15 degrees of true vertical. The bore stem casing in each of the HFE bore holes should protrude above the lunar surface approximately 20 to 30 cm.

HEAT FLOW EXPERIMENT DEPLOYMENT CRITERIA
(Continued)

PARAMETER	CRITERIA
Drill HFE Bore Holes with Apollo Lunar Surface Drill (ALSD) (continued)	Whenever ALSD is placed on the lunar surface, it should be handled with the lanyard and oriented with the battery end down and with the back of the battery facing the sun. Do not place the ALSD in the shade. Normal drilling rate is one inch per second. If drilling rate is less than 5 inches per minute with the first bore stem section, remove bore stem and choose new location approximately 1 meter away. If unsuccessful there, continue drilling until 10 minutes of ALSD power-ON time have elapsed. Each hole should be $1\frac{1}{2}$ diameters from the rims of "fresh" craters more than 1 meter across. Each hole should be 3 or more diameters from boulders more than 1 meter across. Try to avoid having a "fresh" crater greater than 2 meters across between bore holes. Try to avoid having a "fresh" crater greater than 5 meters across between the HFE bore holes and the core sample hole. Disturbance of the lunar suface within 17 feet of probes should be minimal. The area around the probe holes should not be cluttered with debris within a radius of 17 feet. Once the HFE probe is in the hole, do not try to remove it or the bottom hole latch will be damaged. Use probe emplacement tool to insert HFE probe into bore stem casing. Emplacement tool should be attached to top of probe at the first thermal shield. When inserted to proper depth, index on tool should be P1. Astronaut will report actual depth reading to MCC. Attach emplacement tool to second thermal shield and insert shield to depth indicated by tool stripe marked F1. Astronaut will then use emplacement tool to measure length of bore stem protruding above lunar surface and also report this reading to MCC. The reading should be between A7 and B6.

HEAT FLOW EXPERIMENT DEPLOYMENT CRITERIA
(Concluded)

PARAMETER	CRITERIA
Drill HFE Bore Holes with Apollo Lunar Surface Drill (ALSD) (concluded)	Emplace the third thermal shield as a cap at top of bore stem. Align each HFE probe cable as it exits bore stem so that the section of cable marked by a 6-inch black strip to denote location of thermocouple runs due south.
LGE Core Sample	After the two HFE bore holes have been drilled, the ALSD will be used to obtain a deep core sample as part of the Lunar Geology Investigation (S-059). This core hole should be drilled approximately 20 meters north of the deployed HFE probes.

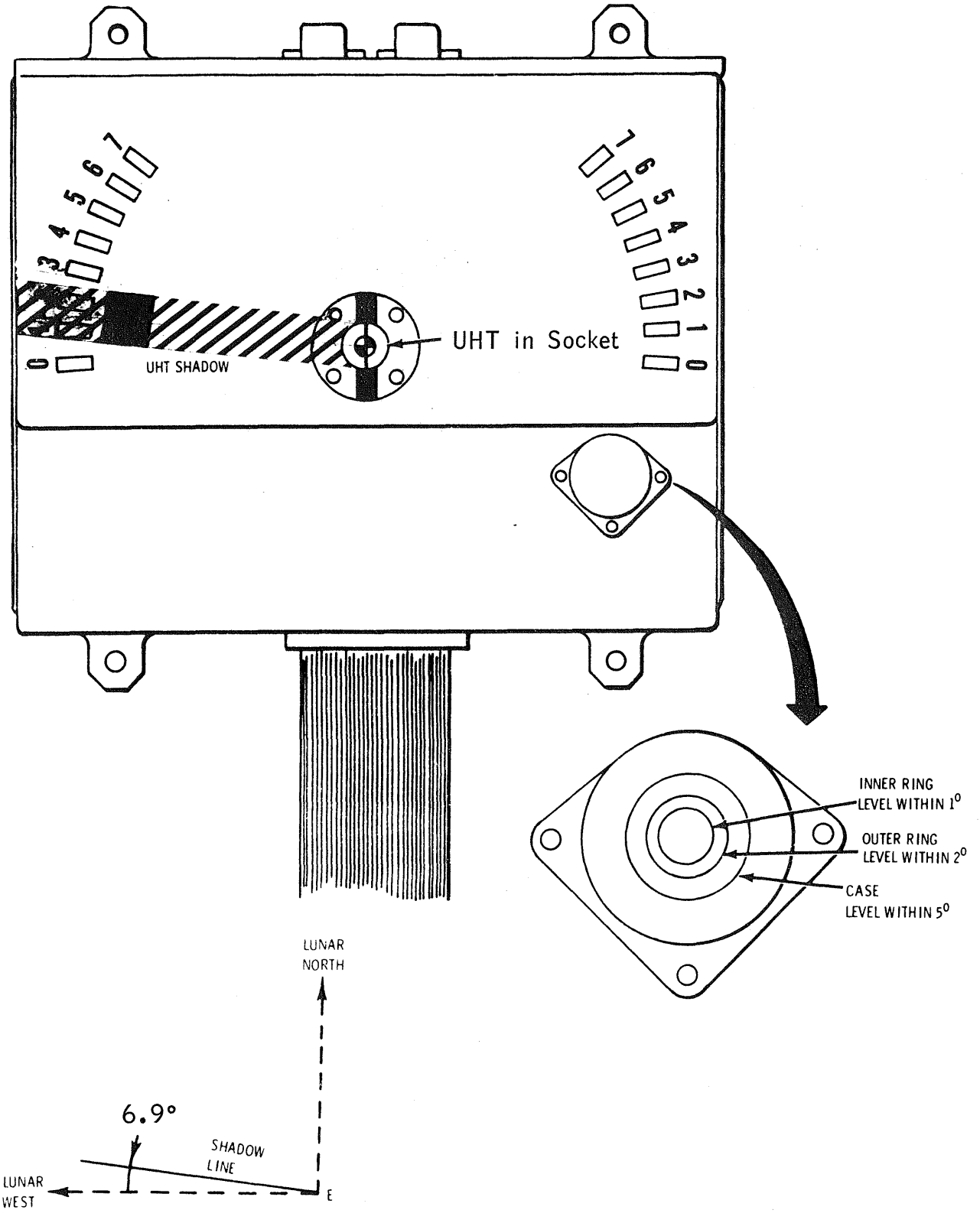

Figure 6 HFE Level and Alignment Indicators

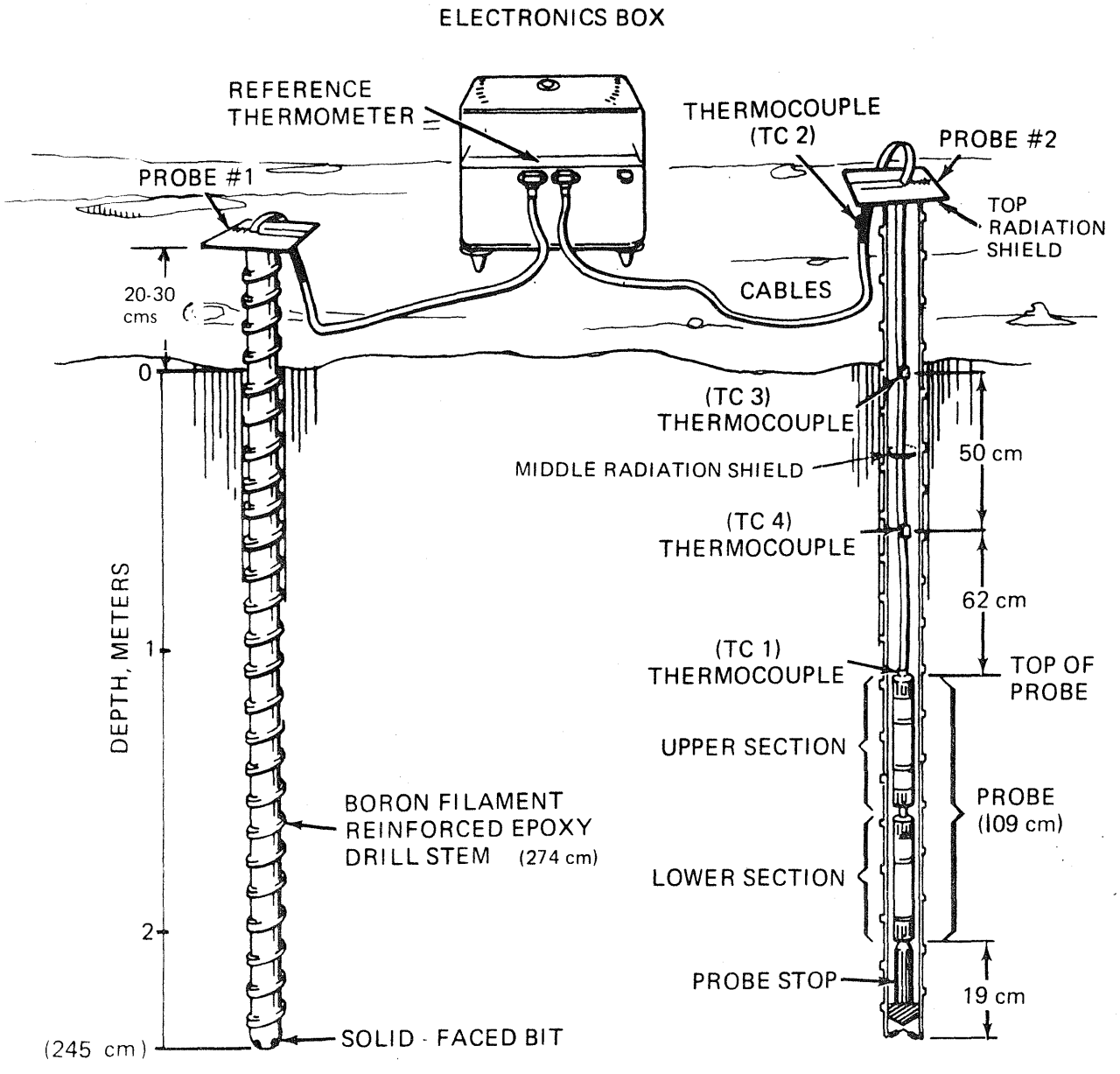

Figure 7 Heat Flow Probes Deployed

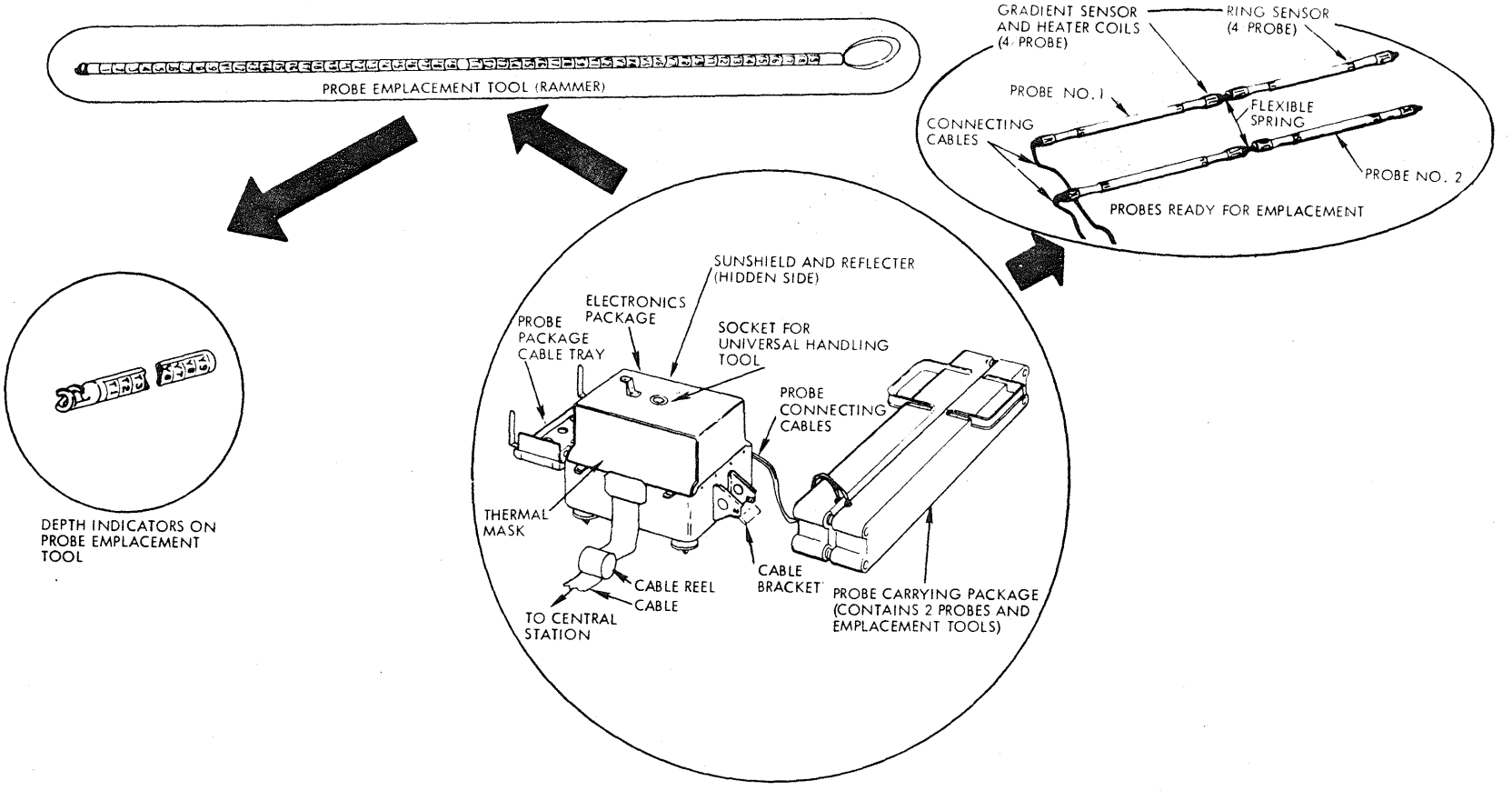

Figure 8 HFE Components

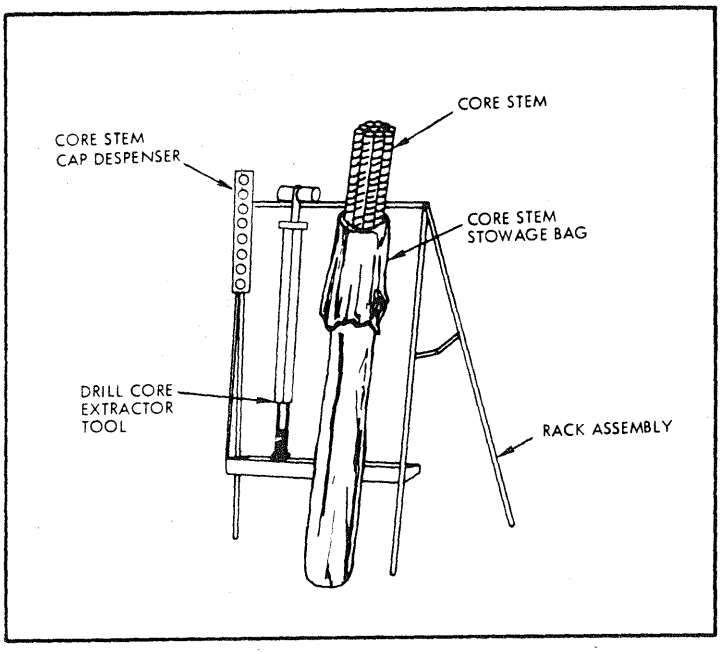

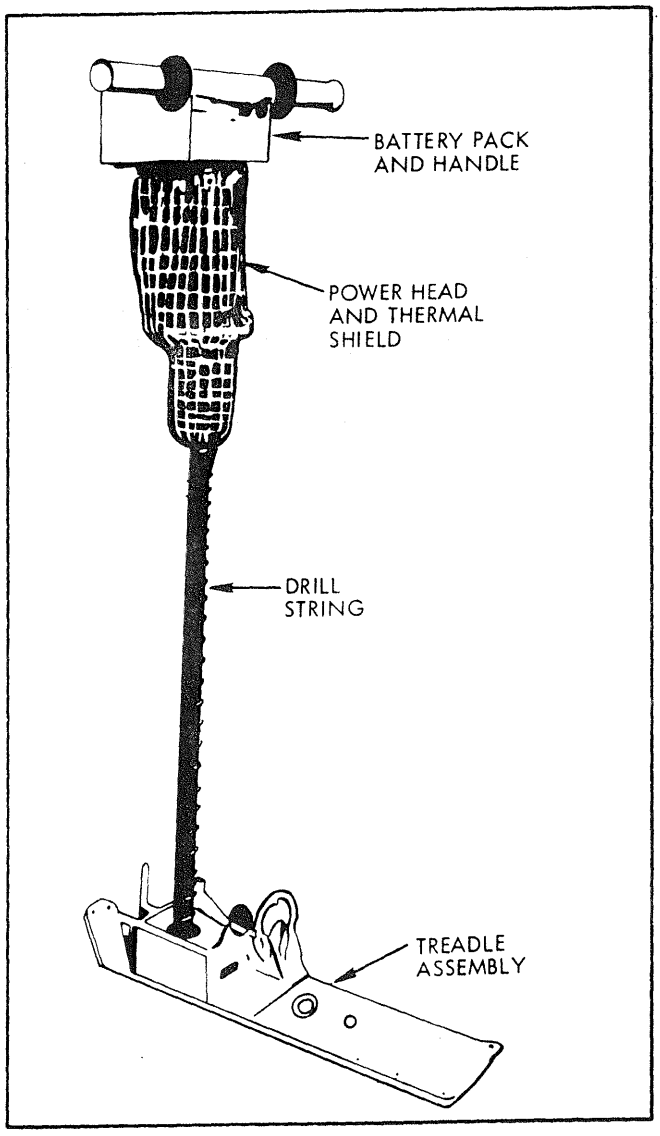

Figure 9 Apollo Lunar Surface Drill Components

LUNAR SURFACE GRAVIMETER DEPLOYMENT CRITERIA

PARAMETER	CRITERIA
Deployment Site	Select level spot, free of material which might shadow the instrument and perturb its thermal control. Surface slope should not exceed 5 degrees. LSG should be 25 feet due west of Central Station, limited by 30-foot cable with normal slack. See Figure 1. The minimum allowable angle between the LSG cable and the LSPE antenna cable is 25 degrees. However, a 45-degree angle is preferred to eliminate cross talk. Remove dust cover at the LSG deployment site.
Sunshade Deployment	Remove all Boyd bolts before deploying sunshade. Raise sunshade by handle until it reaches locked, fully deployed position. With sunshade raised and locked, tilt sunshade to predetermined angle for landing site latitude. Read and report tilt indicator to MCC.
Emplacement, Alignment	Use UHT to emplace LSG on the surface. Point tilted sunshade toward the equator. Using UHT as lever, align LSG so plane of sunshade is parallel to sun's shadow within ± 3 degrees. When the edge of the shadow cast by upper sunshade falls on line inside lower sunshade, alignment is within 3 degrees. See Figure 10.
Leveling	Apply force to UHT handle to firmly embed leveling legs in lunar surface. Level the LSG within ± 3 degrees. When bubble is within target circle, instrument is level within ± 3 degrees. Use UHT to move LSG until it is level.
Gimbal Caging Release	Hold UHT to maintain leveling and alignment and pull on lanyard ring attached to top of sunshade until orange flag disappears inside radiator. Make visual check that uncaging did not change alignment or level. Report level and alignment readings to MCC.

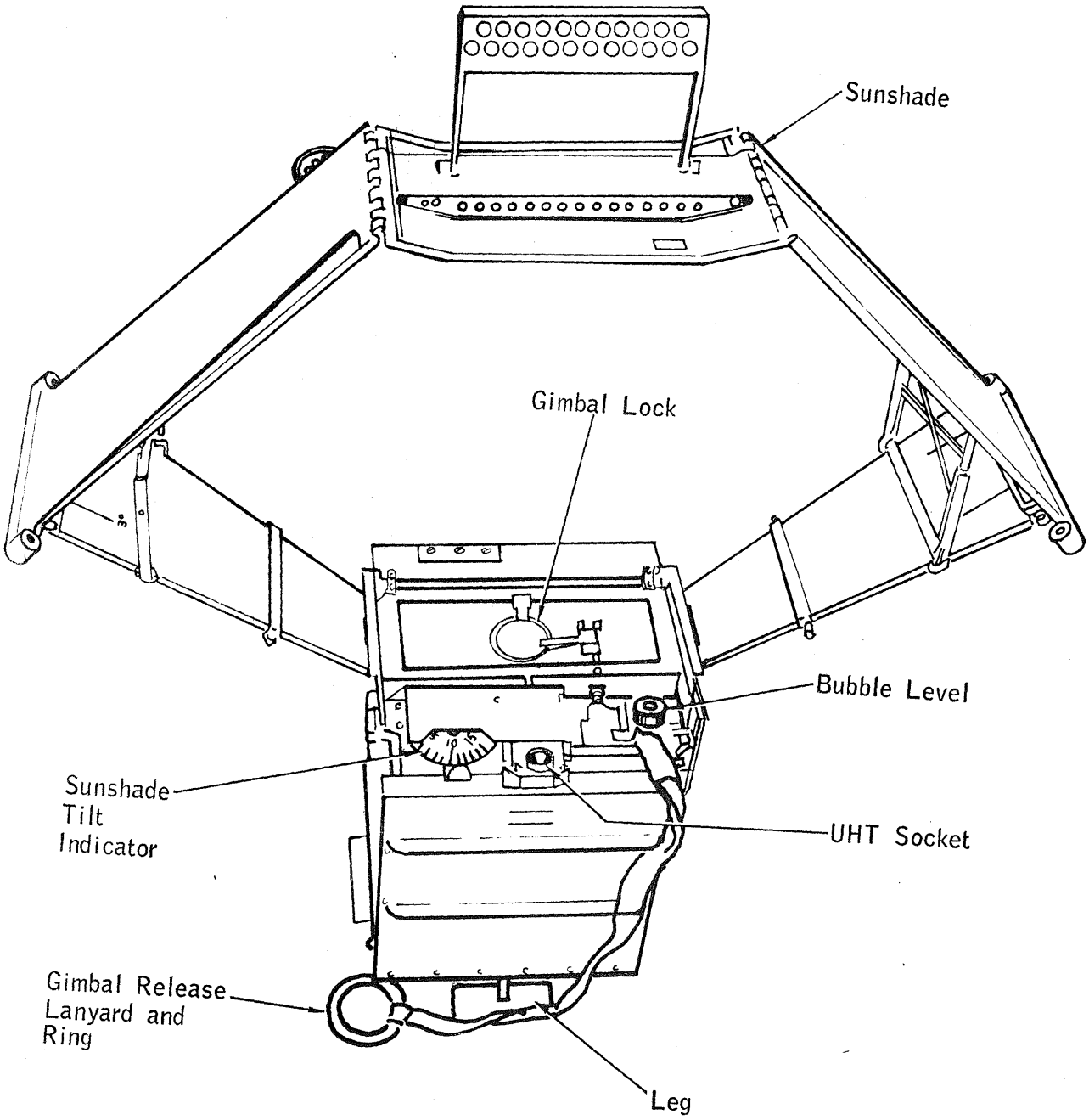

Figure 10 Lunar Surface Gravimeter Deployed

LUNAR SEISMIC PROFILING DEPLOYMENT CRITERIA

PARAMETER	CRITERIA
Geophone Module Site Selection	Deploy Geophone Module 9 meters (30 feet) south of the Central Station. Pick as smooth and level a site as possible for emplacement of Geophone Module and geophones. Deploy a marker flag to mark the location for orientation of the four geophones. Marker flags also serve as anchors for the geophones.
Geophone Emplacement	Deploy the four geophones so that their relative locations are as shown in Figure 11. Deploy marker flag at each geophone location and at the geophone module package to aid in correct interrelation of the four geophones. A gnomon will be emplaced within the triangle beside the third geophone. Geophones should be emplaced on flat terrain if possible, not in craters. Geophones should be deployed so that three of them comprise the vertices of an equilateral triangle with the fourth in the center of the triangle. This will be visually determined by the astronaut sighting along the marker flags and should be in a straight line within $\pm$ 3 degrees.
Geophone Vertical Alignment	Vertical alignment of each geophone is very critical since complete loss of data from a geophone occurs if it is 15 degrees or more off vertical. Geophone spike should be vertical within 7 degrees.
Geophone Cables	If geophone cables are deployed over depressions more than two feet deep, the astronaut must insure that the cable has enough slack to follow the contour of the lunar surface.
LSPE Enable	After deploying the geophones, return to the Central Station and rotate Astronaut Switch #2 clockwise to enable the LSPE electronics. If left in the counter-clockwise position, LSPE operation is inhibited.

PARAMETER	CRITERIA
LSPE Transmitter Antenna Deployment	Deploy the LSPE Transmitter Antenna 40 feet (12 meters) northwest of the Central Station. Antenna will be mounted on the HFE subpallet from ALSEP Subpackage #1. See Figure 13. Extend telescoping whip antenna to full 69-inch length. When fully extended, the astronaut will have extracted 11 antenna sections from the stowage tube -- 5 with the first grip ring and 6 with the second grip ring.
Explosive Packages Deployment	During EVA #1, the astronauts will remove the two EP transport frames on the experiment pallet which are stowed in Quad III of the LM. All of the eight LSPE explosive packages on the two transport frames must be placed in the sun on the lunar surface before they are stowed on the LRV for deployment. This is necessary to insure that the timer within each explosive package has reached the minimum operating temperature of +40°F. See Figures 14 and 15. Explosive packages will be deployed as shown in Figure 16. Before starting out on the LRV geology traverse during EVA #1, the astronauts will stow on the LRV the EP pallet which contains EP's #5, #6, #7, and #8. During the EVA #1 traverse, the astronauts will deploy in succession: EP #6 (1 lb.) (90-hr. timer) 1.3 km from ALSEP EP #5 (3 lbs.)(91-hr. timer) 2.0 km from ALSEP EP #7 (1/2 lb)(92-hr. timer) 0.8 km from ALSEP Before starting out on the LRV geology traverse during EVA #2, the astronauts will stow on the LRV the EP pallet which contains EP's #1, #2, #3, and #4. During the EVA #2 traverse, the astronauts will deploy in succession: EP #3 (1/8 lb.) (90-hr. timer) 0.16 km from ALSEP EP #1 (6 lbs.) (91-hr. timer) 2.4 km from ALSEP EP #2 (1/4 lb.) (93-hr. timer) 0.25 km from ALSEP

PARAMETER	CRITERIA
Explosive Packages Deployment (con't)	During EVA #3, the astronauts will deploy: EP #8 (1/4 lb.) (92-hr. timer) 0.25 km from ALSEP EP #4 (1/8 lb.) (93-hr. timer) 0.16 km from ALSEP The #1, 6-pound EP must be deployed at the greatest distance from the LSPE geophone arrary, but should not exceed 2.5 kilometers. The #4, 1/8-pound EP must be deployed a minimum of 150 meters from the geophone array. As each EP is deployed on the lunar surface, the astronaut will extend the telescoping whip antenna, then pull the three rings in sequence. MCC must be informed by voice communications of the exact time each pin is pulled. The explosive charge package may be lowered to the surface using the extended receiving antenna.
LSPE Photo Requirements	From a position approximately 8 meters west-southwest and east-southeast of center geophone, take 3 photos (stereo pattern) of both the easterly and westerly geophones. Photos to include gnomon in field of view. From center of geophone area, take 360° panorama of geophone deployment site. One photograph of the deployed geophone module cross-sun from 7 feet with Central Station in background. NOTE: Should the lunar surface be so uneven that the astronaut cannot see all four geophones, a panoramic series should be taken at each high point in the deployment area. The number of positions at which panoramic photos are taken would depend on the terrain. Each geophone location must be determined in relation to the others. One photo of the deployed transmitting antenna on the HFE sub-pallet taken from approximately 7 feet.

LUNAR SEISMIC PROFILING DEPLOYMENT CRITERIA (Concluded)

PARAMETER	CRITERIA
LSPE Photo Requirements (con't)	One photograph of the astronaut switches on Central Station from 3 feet. At each EP deployment site take a standard geologic panorama. Panorama must include the EP with antenna deployed.

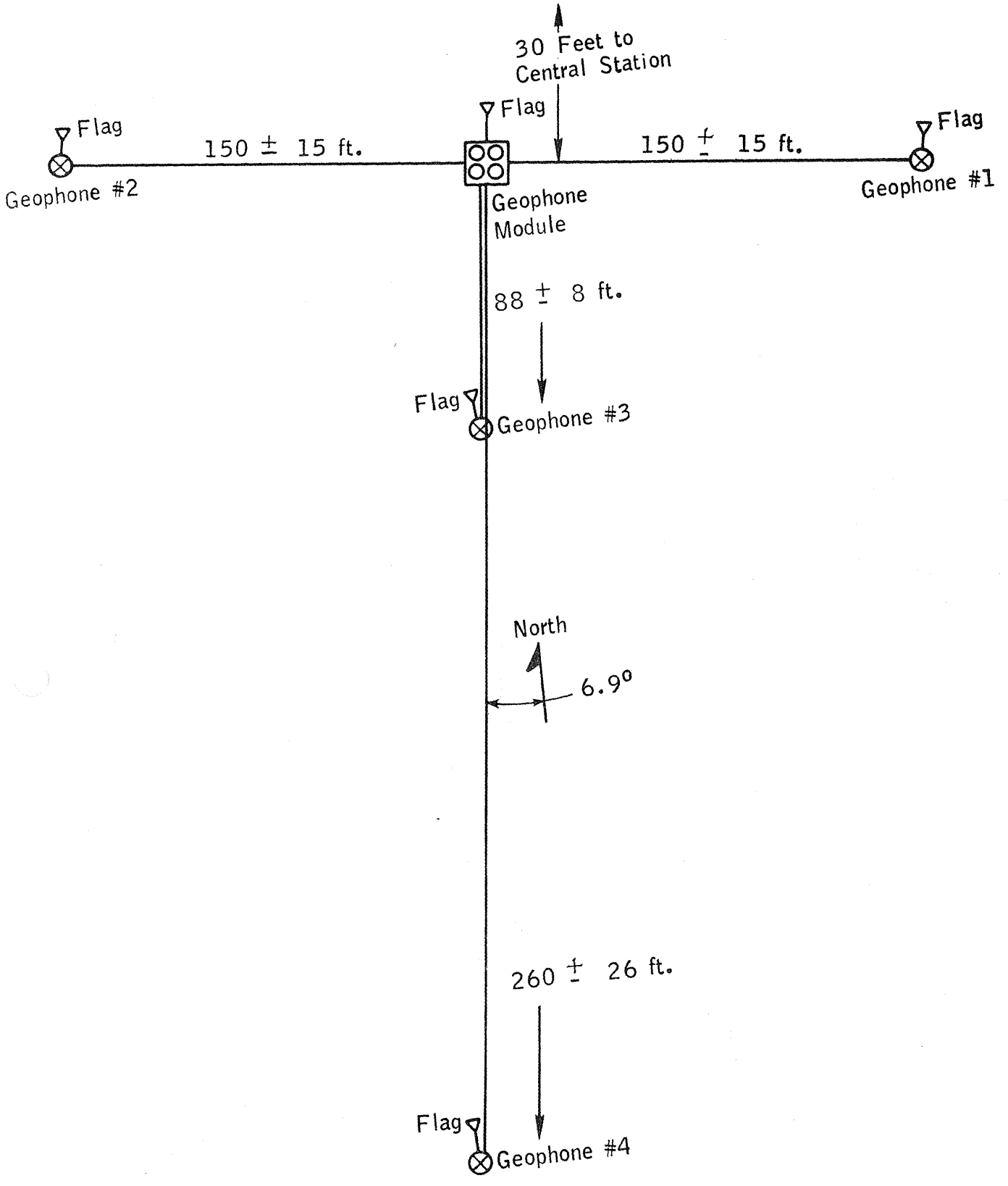

Figure 11 LSPE Geophones Deployed

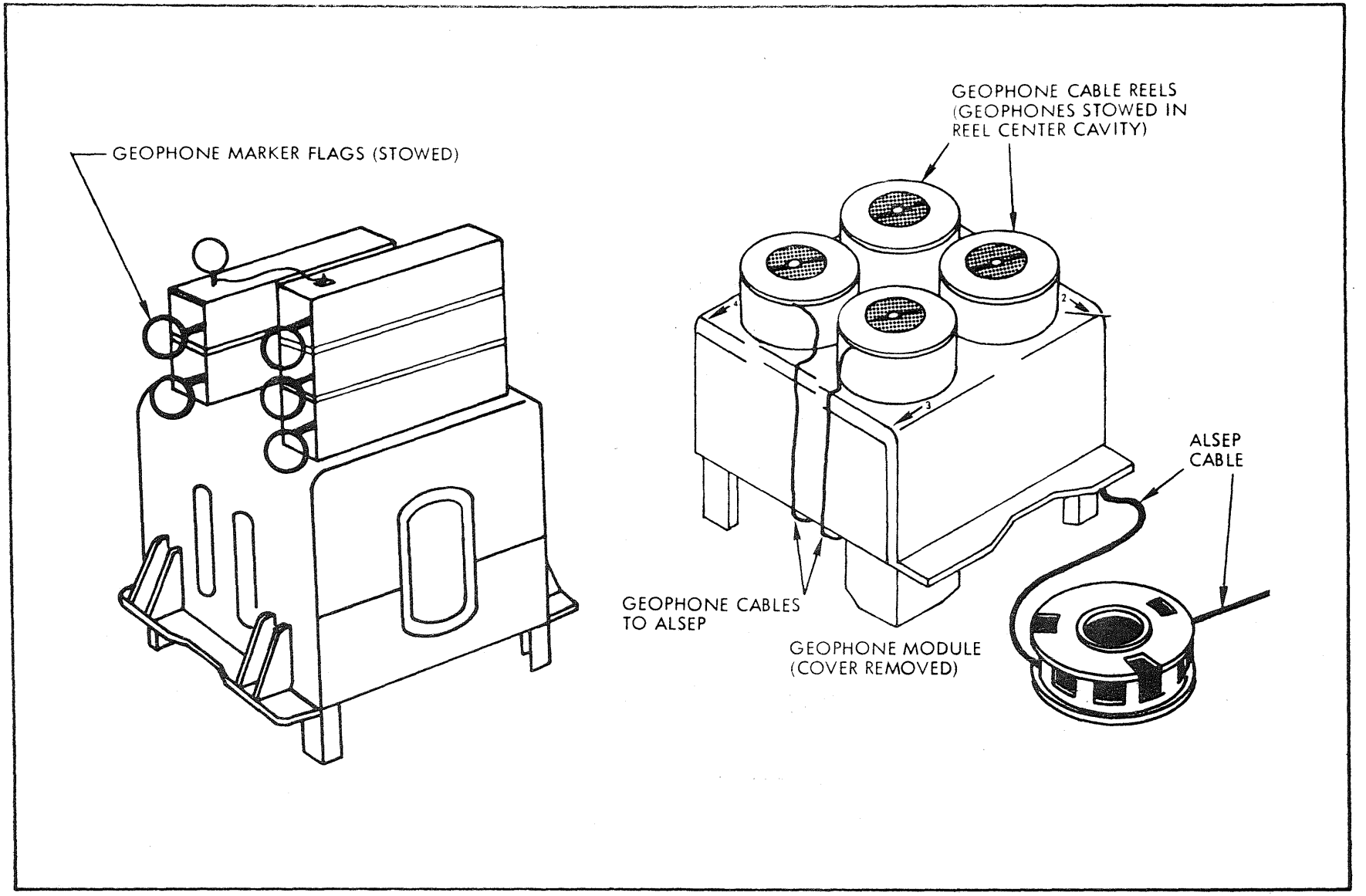

Figure 12 LSPE Geophone Module

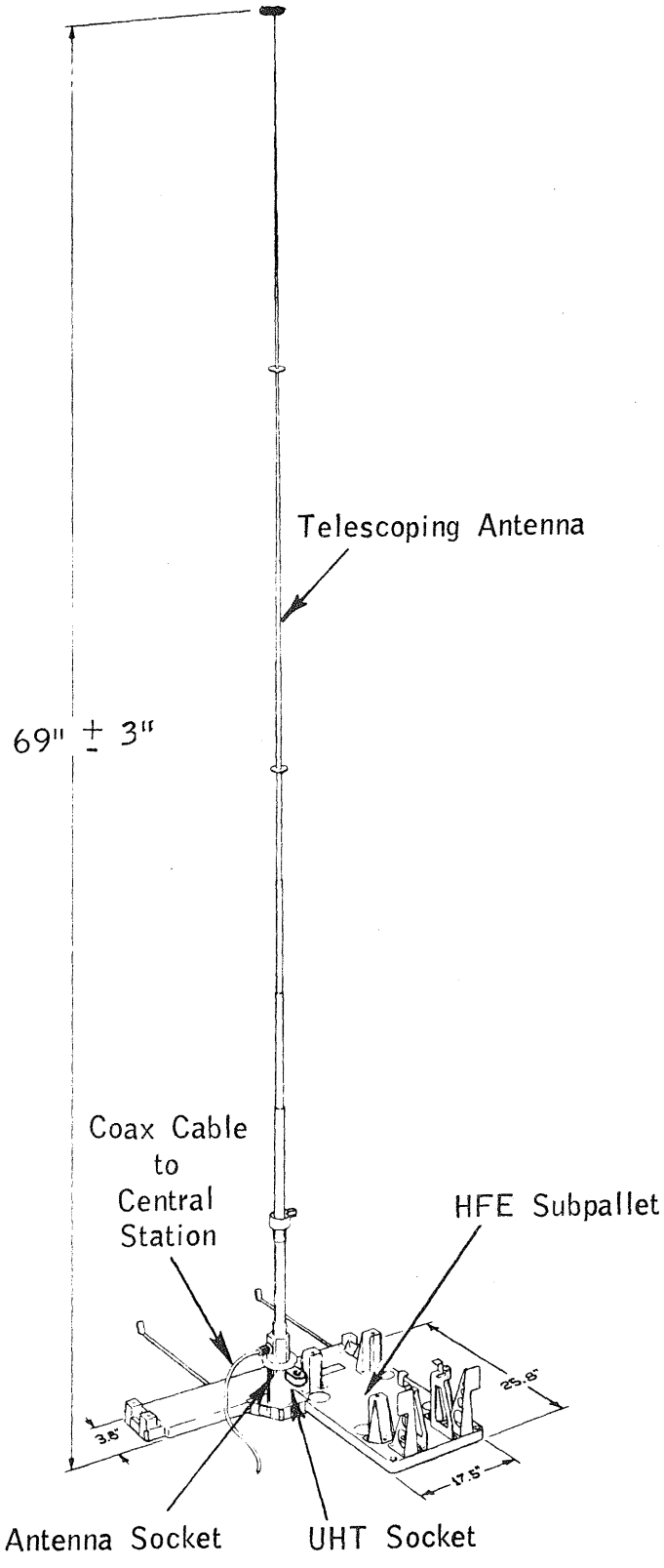

Figure 13 LSPE Transmitting Antenna

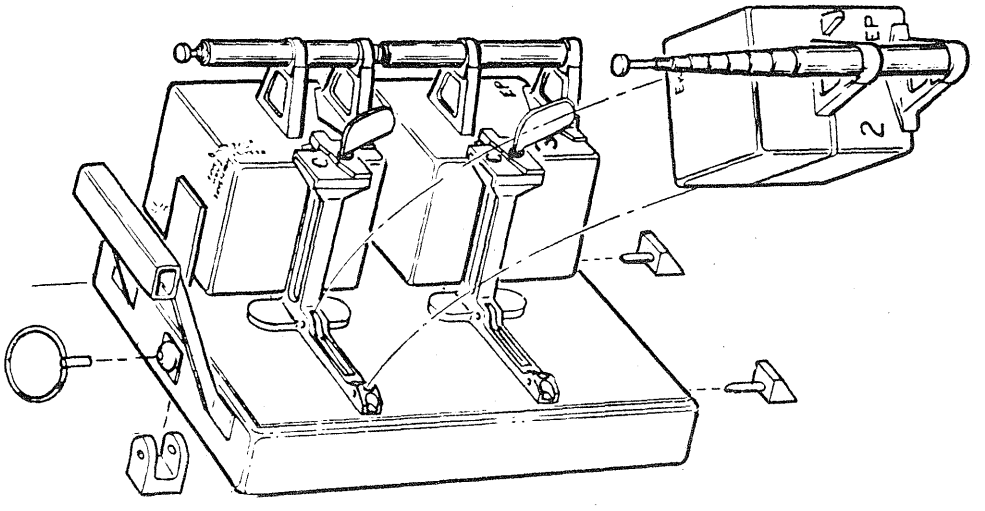

There are 2 Explosive Package Pallets
There are 4 Explosive Packages on each Pallet

Deployment Sequence

EVA #1	EVA #2	EVA #3
EP #6 1 lb. charge 90-hr. Timer	EP #3 1/8 lb. charge 90-hr. Timer	EP #8 1/4 lb. charge 92-hr. Timer
EP #5 3 lb. charge 91-hr. Timer	EP #1 6 lb. charge 91-hr. Timer	EP #4 1/8 lb. charge 93-hr. Timer
EP #7 1/2 lb. charge 92-hr. Timer	EP #2 1/4 lb. charge 92-hr. Timer	

Figure 14 LSPE Explosive Packages

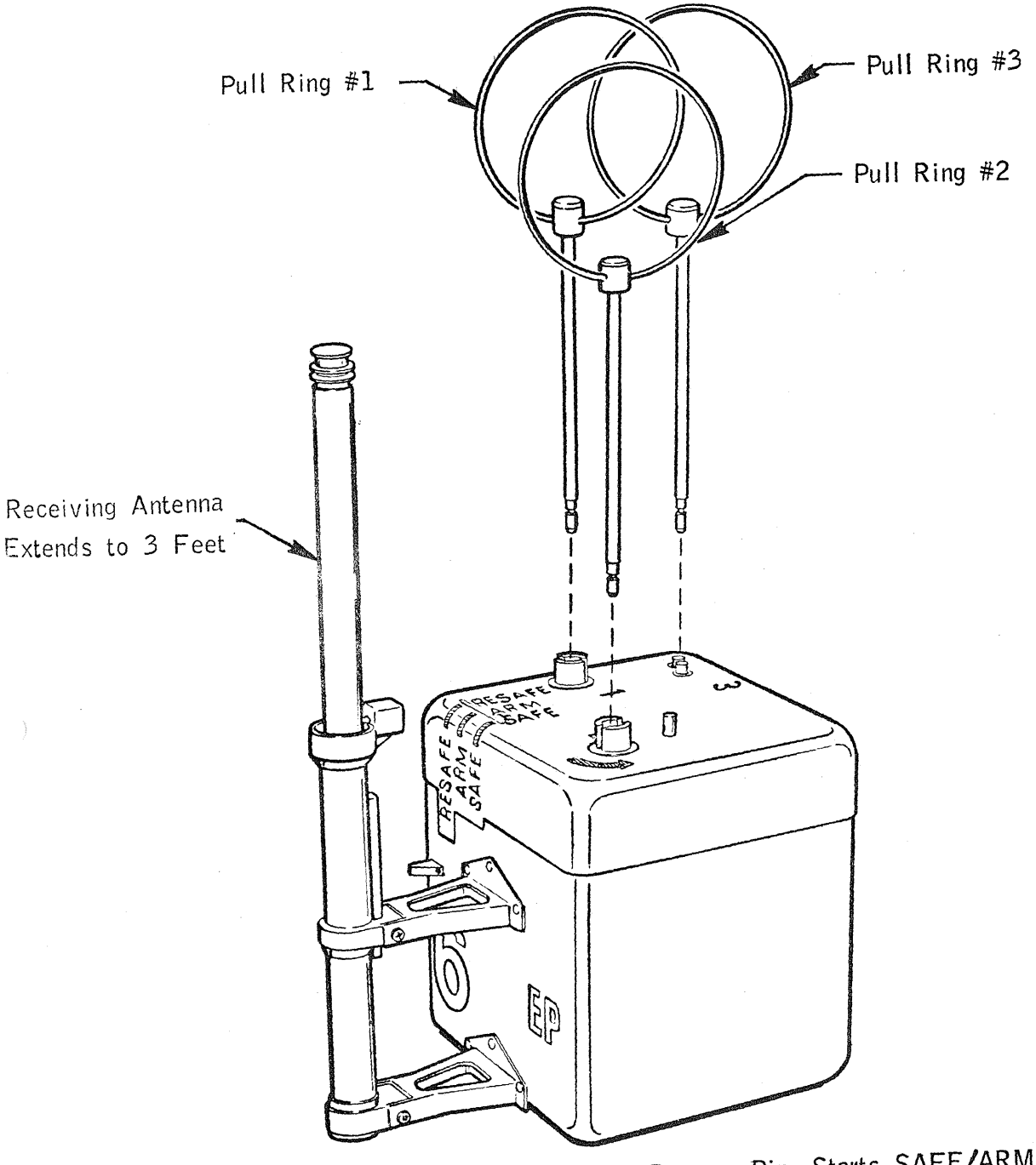

Pull Ring #1 - Swing up; Rotate 90° CCW; Remove Pin; Starts SAFE/ARM Slide Timer

Pull Ring #2 - Releases SAFE/ARM Plate

Pull Ring #3 - Starts Thermal Battery Timer; Frees Firing Pin

Figure 15 LSPE Explosive Package

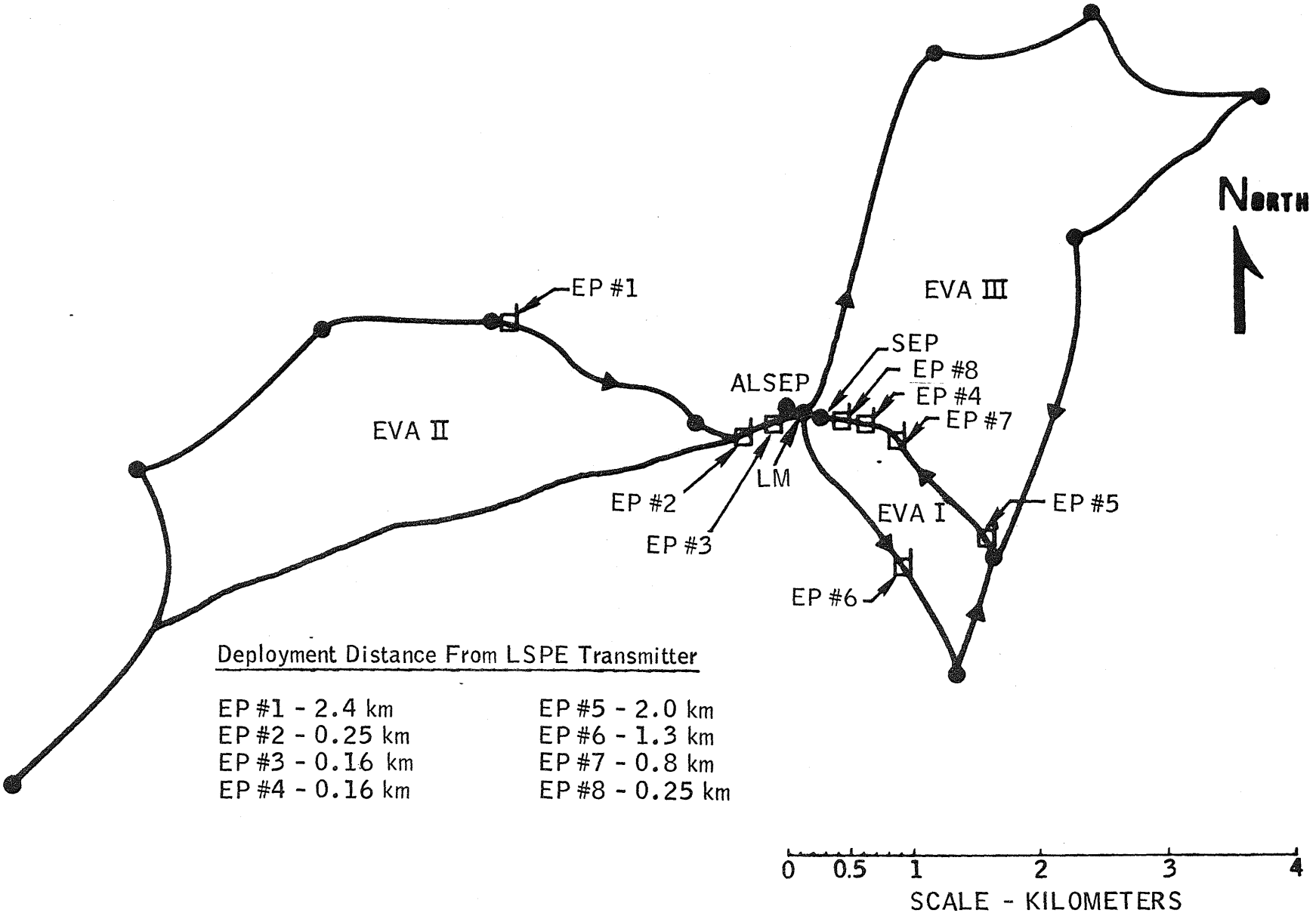

Figure 16 LSPE Explosive Packages Deployed

LUNAR ATMOSPHERIC COMPOSITION DEPLOYMENT CRITERIA
(LUNAR MASS SPECTROMETER)

PARAMETER	CRITERIA
Sensor Venting	Prior to removal of the LACE from the Subpackage #1 pallet, the astronaut will pull the lanyard ring on the instrument, allowing the escape of the krypton gas with which the sensor was backfilled on earth.
LACE Deployment	The LACE will be deployed 14 meters (45 feet) or more east-northeast of the Central Station. See Figure 1. The deployment location shall be such that surrounding equipment and natural terrain features, e.g., boulders will not be in the plane containing the entrance aperture of the instrument within a radious of 15 meters.
Alignment	There is no science requirement for azimuth alignment of the LACE. However, it should be oriented so that the cable exit faces the Central Station. The ribbon cable should lie flat on the surface and not be folded or twisted.
Leveling	The LACE will be leveled within ±15 degrees. When the bubble in the bubble level is free from the edge of the window, the instrument is leveled. If the LACE is not level, do not embed the instrument, but reposition it in a more level location.
Sensor Activation	After the LACE has been deployed on the lunar surface, the astronaut will use the UHT as a lever, moving in the direction of the arrow, to snap the aperture seal. Deposit the aperture cover at least 1 meter away from the instrument. Verify that the LACE is still level within ± 15 degrees and is not embedded in the lunar surface. Not until after LM ascent stage liftoff will an uplink command be sent from MCC to release the dust cover and expose the thermal radiation mirrors.

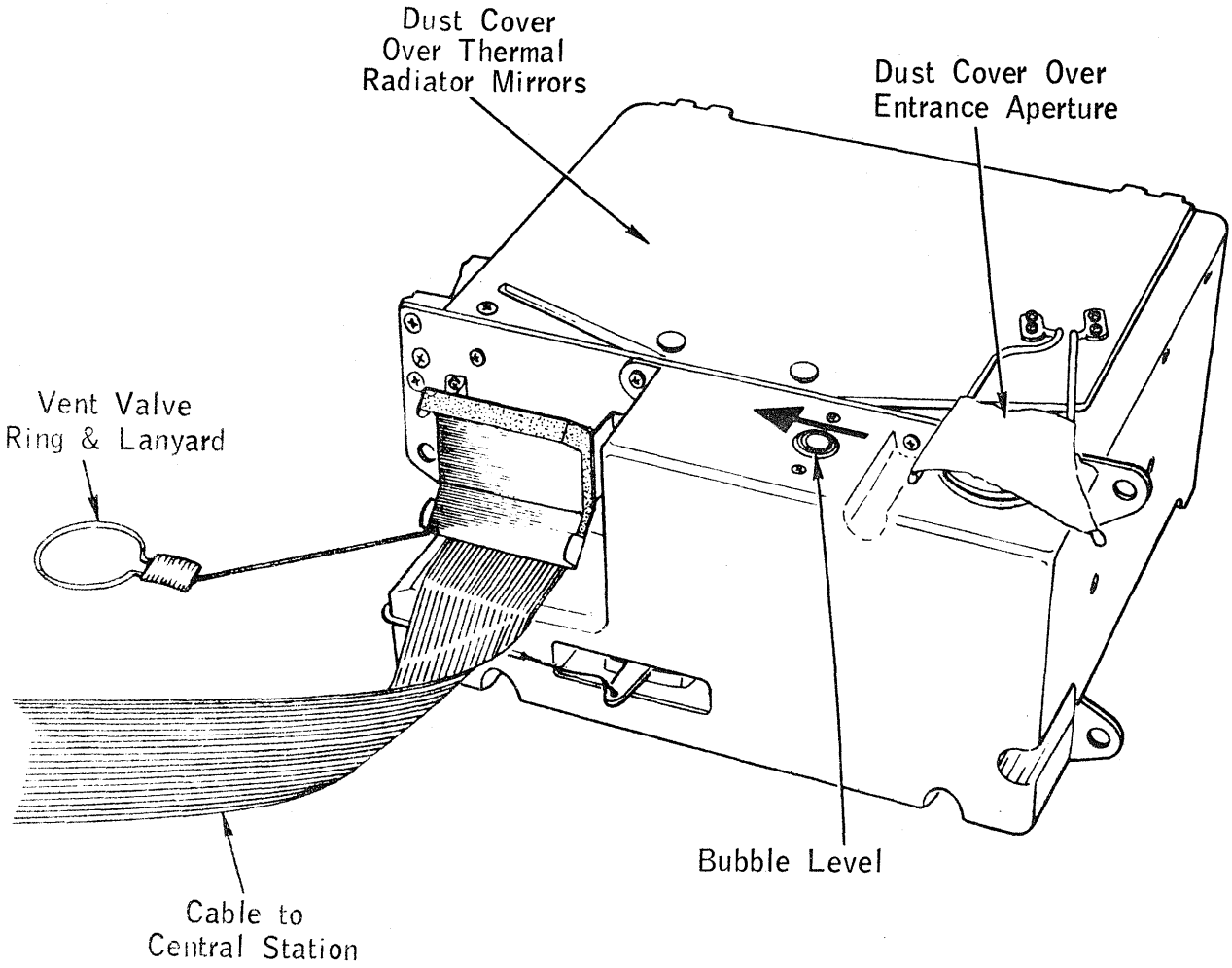

Figure 17 Lunar Atmospheric Composition Experiment
(Lunar Mass Spectrometer)

LUNAR EJECTA AND METEORITE EXPERIMENT DEPLOYMENT CRITERIA

PARAMETER	CRITERIA
LEAM Deployment Site	Remove the LEAM from Subpackage #2 and deploy the instrument approximately 8 meters (25 feet) southeast of the Central Station as shown in Figure 1. The LEAM should not be placed adjacent to a boulder or crater, but preferably on a gently sloping hummock as high above the average level as reasonable. The East and West sensors require a free 120-degree field-of-view with the look angle of the East sensor aligned 25 degrees north of east to hopefully intercept inter-stellar particles. There should be no boulder extending more than 10 degrees above the horizontal within the field-of-view of the East and West sensors. Any debris from the unpacking of the experiments should be piled out of the sensors' field-of-view to avoid any possible thermal reflections directed at the sensors.
Leveling and Alignment	When the four legs have been deployed and the pin in the UHT swivel socket removed, level the instrument within ± 5 degrees with the aid of the bubble level. Simultaneously align the LEAM within ± 5 degrees of the decal marking by observing the shadow cast by the gnomon on the partial compass rose on the top of instrument. The degree mark where the shadow falls on the compass rose must be reported to MCC.

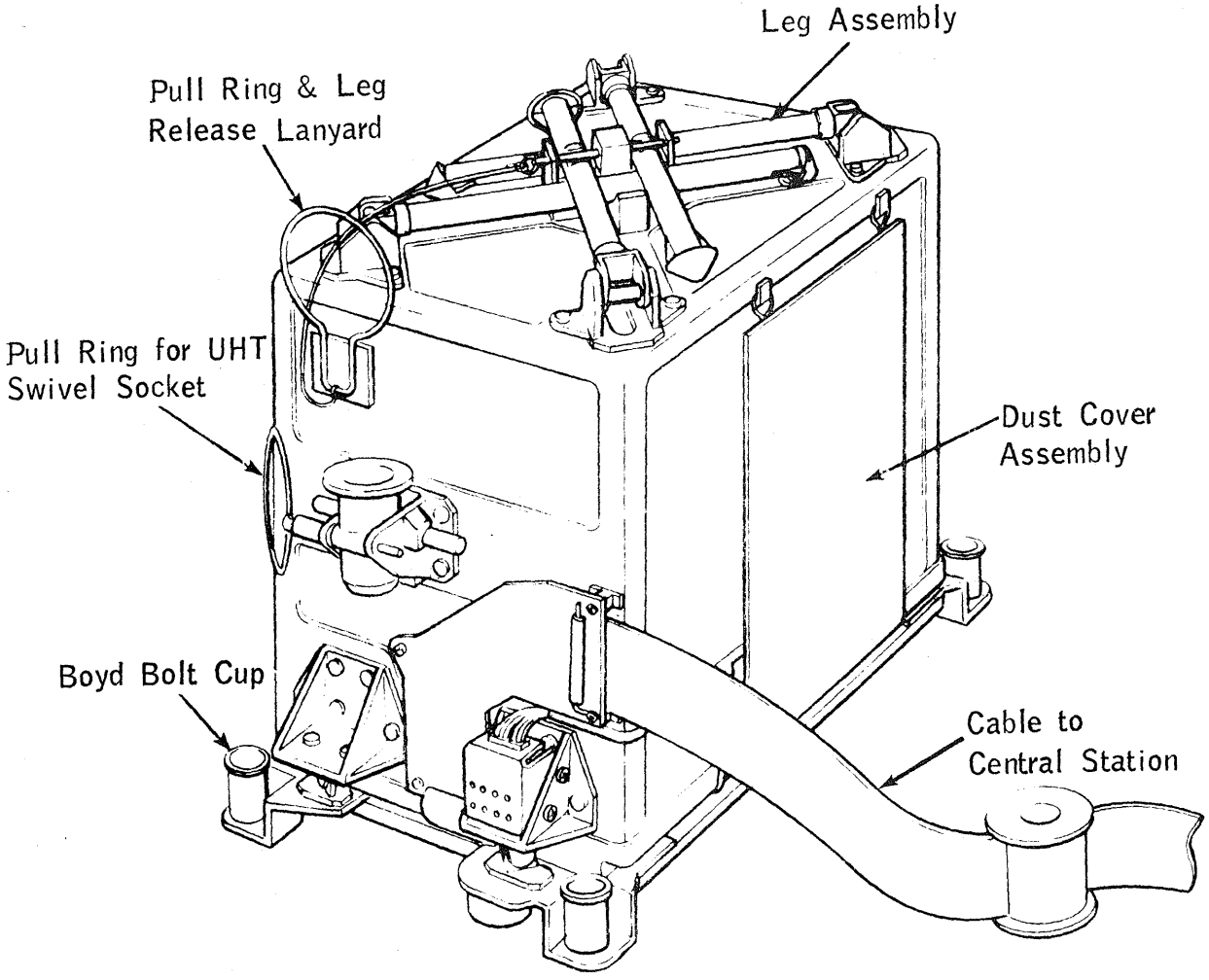

Figure 18 LEAM In Upside-Down Stowed Position

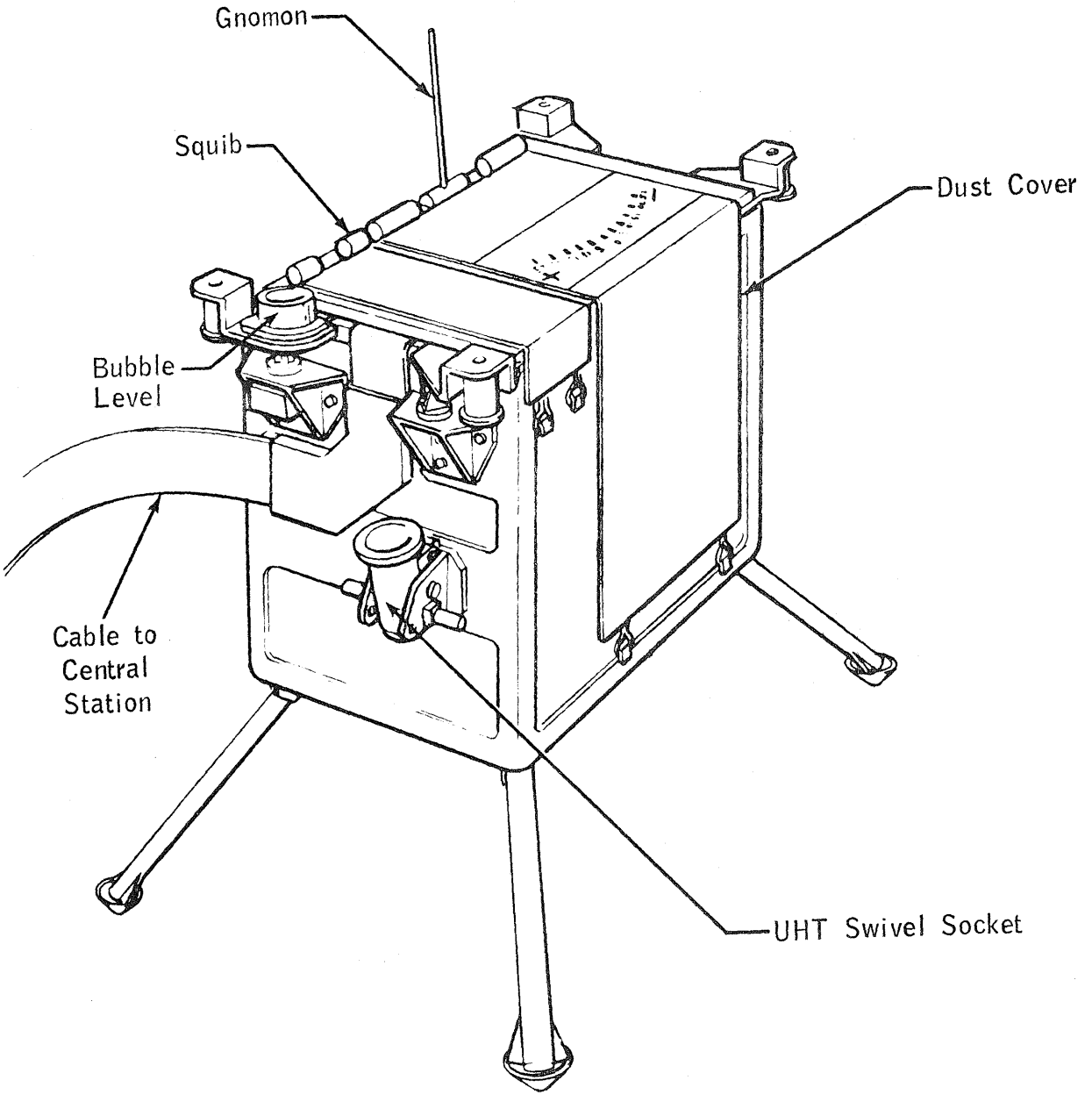

Figure 19 LEAM Deployed

SURFACE ELECTRICAL PROPERTIES EXPERIMENT DEPLOYMENT CRITERIA

PARAMETER	CRITERIA
Removal from LM	When the right-hand experiment pallet stowed in Quad III of the LM has been removed, the SEP can be removed. The SEP transmitter can be temporarily left on a LM footpad.
SEP Receiver Deployment	The SEP should be removed from the LM and the Receiver deployed on the LRV early during EVA #1. The SEP Receiver will be mounted on the SEP bracket at the aft end of the LRV. See Figures 20 and 23. Read and report to MCC the temperature reading of the SEP Receiver. Mount the Receiver antenna on the LRV.
SEP Transmitter Deployment	Near the end of EVA #1 after the ALSEP has been deployed, the SEP Transmitter can be removed from the Quad III pallet which was temporarily placed on a LM footpad. The SEP Transmitter should be deployed over a reasonably smooth area so that the antenna dipole pairs may be deployed in straight lines (without kinks), lie reasonably flat (essentially in continuous contact with the lunar surface), and so that one dipole pair is orthogonal to the other. The Transmitter site should be selected so that no large metallic object other than the transmitter housing, which is symmetrically located at the center, is within a circle formed by the antenna as a radius (35 meters). The Transmitter site should be selected so that the Transmitter housing is a minimum of 100 meters from ALSEP and at least 70 meters from the LM and so that the Transmitter-to-LRV line-of-site during the initiating phases of the traverse does not include the LM. Deploy the four legs of the SEP Transmitter in numbered sequence: 1, 2, 3, 4. Remove and discard antenna reel clamps before positioning transmitter. Place Transmitter on lunar surface with arrow on top of housing pointing directly toward sun.

SURFACE ELECTRICAL PROPERTIES EXPERIMENT
DEPLOYMENT CRITERIA (Continued)

PARAMETER	CRITERIA
SEP Transmitter Alignment	Observe shadow cast by null meter gnomon on partial compass rose and align Transmitter such that gnomon shadow falls on preset marker. Report alignment setting to MCC.
SEP Transmitter Leveling	Observe bubble level and level Transmitter to within ± 3 degrees of vertical. Bubble must be within outer scribed circle on face of level indicator. Report level indication to MCC.
SEP Transmitter Emplacement	Concurrently with the leveling procedure, the legs should be "scrunched" into the lunar surface to provide a firm, stable emplacement so that the antenna deployment procedure will not disturb the alignment and leveling of the Transmitter package.
SEP Transmitter Antenna Deployment	The four antenna elements can be oriented by utilizing the LRV, its guidance system and resulting tracks to lay out the position for the antennas. The four antennas can then be deployed in a straight line along the LRV tracks. Deploy antenna element #1 in a straight line for its full 35-meter length. Similarly deploy elements #2, #3, and #4. The Transmitter antenna pairs must be deployed so that they are orthogonal to each other within ± 10 degrees. Each Transmitter antenna dipole (two elements) must be straight within ± 10 degrees. One of the deployed Transmitter antennas (dipole) should be parallel to the direction of the traverse. It is especially important that the LRV be driven in the same direction for the first 300 meters.
Transmitter Realignment	Without disturbing deployed antenna elements, re-align Transmitter so that gnomon shadow falls within ± 5 degrees of the 0-degree marker on partial compass rose. Report setting to MCC.
Transmitter Releveling	Relevel Transmitter to within 3 degrees of vertical. Report level indication to MCC.

SURFACE ELECTRICAL PROPERTIES EXPERIMENT
DEPLOYMENT CRITERIA (Continued)

PARAMETER	CRITERIA
Solar Panel Deployment	The Transmitter must be deployed so that the solar cell panel is facing the sun at an optimum lead angle in order to maximize the power available during the lunar stay. Rotate the Carry Handle to the proper operating position, either HOT or COLD as directed in real-time by MCC. The COLD position will be used if the sun angle is less than 20 degrees at time of deployment. The HOT position will be used if the sun angle is greater than 20 degrees. Deploy the solar panels, then remove thermal cover. Place the Transmitter ON/OFF/STANDBY switch in the STANDBY position. Check bubble level to insure that Transmitter is still level within ± 3 degrees.
SEP Operational Sequences	At the end of EVA #1, open Receiver radiator covers. Read and report to MCC the Receiver temperature. Dust off the radiator, then close only the large portion of radiator cover. At the beginning of EVA #2, place the Receiver ON/OFF/STANDBY switch to the STANDBY position. Notify MCC of the time when this was done. This operation should occur approximately 20 minutes before the Transmitter is activated. Close Receiver radiator covers. At the beginning of EVA #2, drive LRV to SEP Transmitter location. Place Transmitter ON/OFF/STANDBY switch in the ON position. Place SEP receiver ON/OFF/STANDBY switch in the ON position. Proceed with EVA #2. At the end of EVA #2, place SEP Receiver ON/OFF/STANDBY switch in STANDBY position. Open Receiver radiators, dust radiators. Read and report Receiver temperature to MCC and close large portion of Receiver radiator cover. At the beginning of EVA #3, open large portion of SEP Receiver radiator cover and read and report Receiver temperature to MCC. Dust Receiver radiator and close all Receiver radiator covers. Place

SURFACE ELECTRICAL PROPERTIES EXPERIMENT
DEPLOYMENT CRITERIA (Continued)

PARAMETER	CRITERIA
SEP Operational Sequences (continued)	Receiver ON/OFF/STANDBY switch in ON position. Proceed with EVA #3. At the end of EVA #3, the Transmitter must be turned OFF.
Tape Retrieval	At the end of EVA #3, turn Receiver OFF, then remove the Data Storage Electronics Assembly (DSEA) containing the science data on magnetic tape. Place the DSEA in a Sample Collection Bag for return to MSC and delivery to the PI.
Photo Requirements	1. One stereo pair of the rear of LRV following completion of deployment of SEP Receiver and antenna on the LRV. 2. One stereo pair similar to #1 at each LRV stop. This requirement can be satisfied by the panoramic view taken at these sites if the LRV is included. 3. One photograph taken from a few steps beyond the end of each dipole by looking in the direction of the SEP Transmitter. Other astronaut should stand at opposite end of dipole to aid in orientation. 4. 360-degree panoramic view of the deployment site from a position approximately 3 meters from the SEP Transmitter, following completion of Transmitter deployment. 5. Photograph of the LRV position relative to the Transmitter at the end of the final traverse. 6. Copies of the panoramic views taken at major sites in support of Lunar Geology Investigation are desired.
SEP Ideal Traverses	An "ideal" traverse for the SEP experiment would have one of two forms: a) Start from a point about 20 meters from the Transmitter and close to any one dipole leg; the LRV would proceed in a straight line collinear

SURFACE ELECTRICAL PROPERTIES EXPERIMENT
DEPLOYMENT CRITERIA (Concluded)

PARAMETER	CRITERIA
SEP Ideal Traverses (Continued)	with that dipole leg to a range in excess of 6 kilometers and then would return over the same path to the end point which is coincident with the starting point. b) Start from a point which is close to any dipole leg and about 20 meters from the transmitter; the LRV would proceed in a straight line to a range exceeding 6 kilometers and then would return over a straight line displaced by a known angle from the outward track. An "ideal" set of traverses would include several of each of these two types of traverses in each of four orthogonal directions. The beneficial features of these traverses are: 1. Each traverse starts and ends about 20 meters from the Transmitter; that is, at a distance from the Transmitter which is about half the length of one dipole leg. 2. Each traverse includes a straight line segment extending to at least 6 kilometers from the Transmitter. 3. The direction of the straight line with respect to the deployed dipoles is known. 4. At least one "inward" track retraces the path used during an "outward" leg of the traverse.

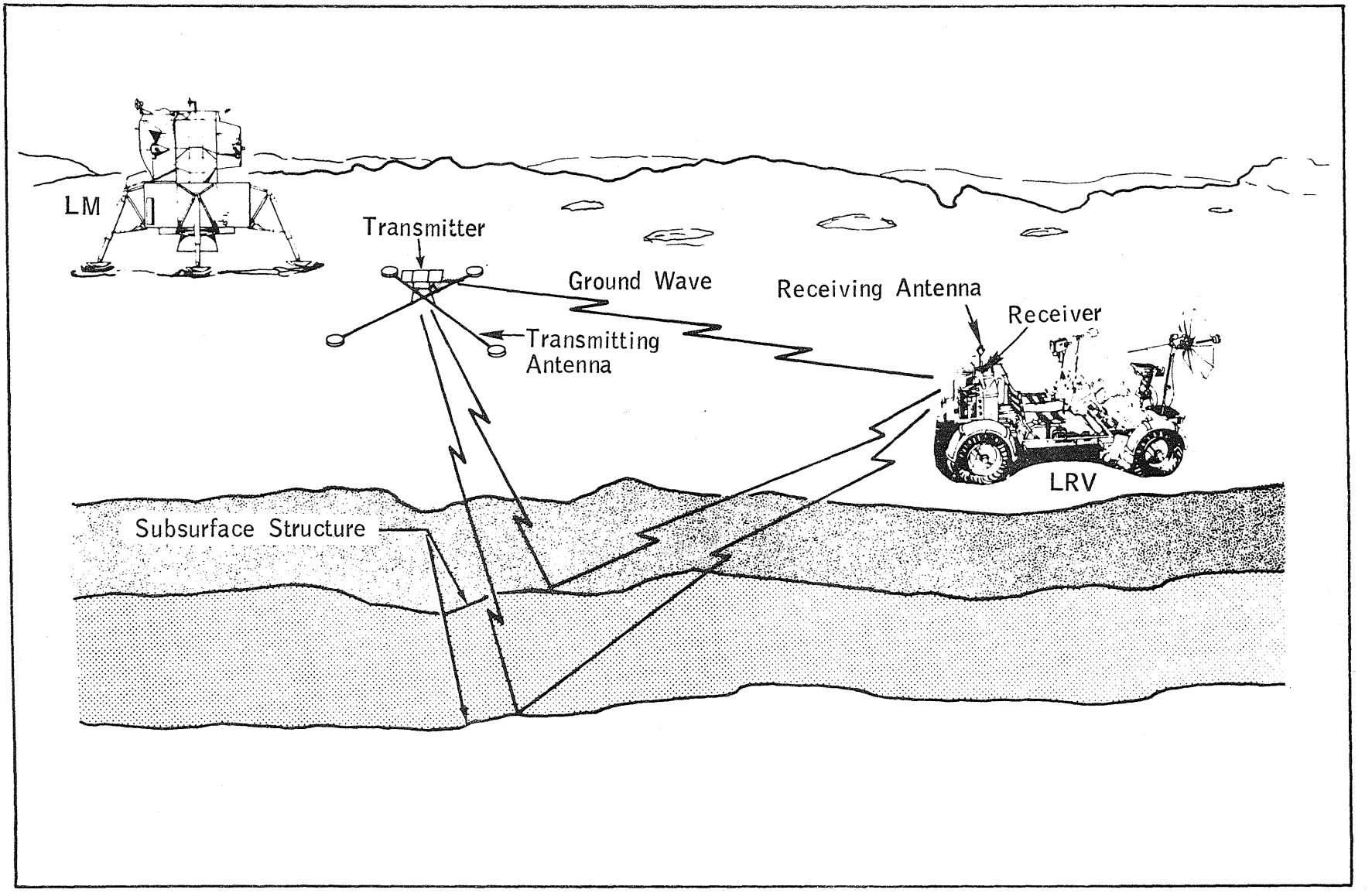

Figure 20 Surface Electrical Properties Experiment

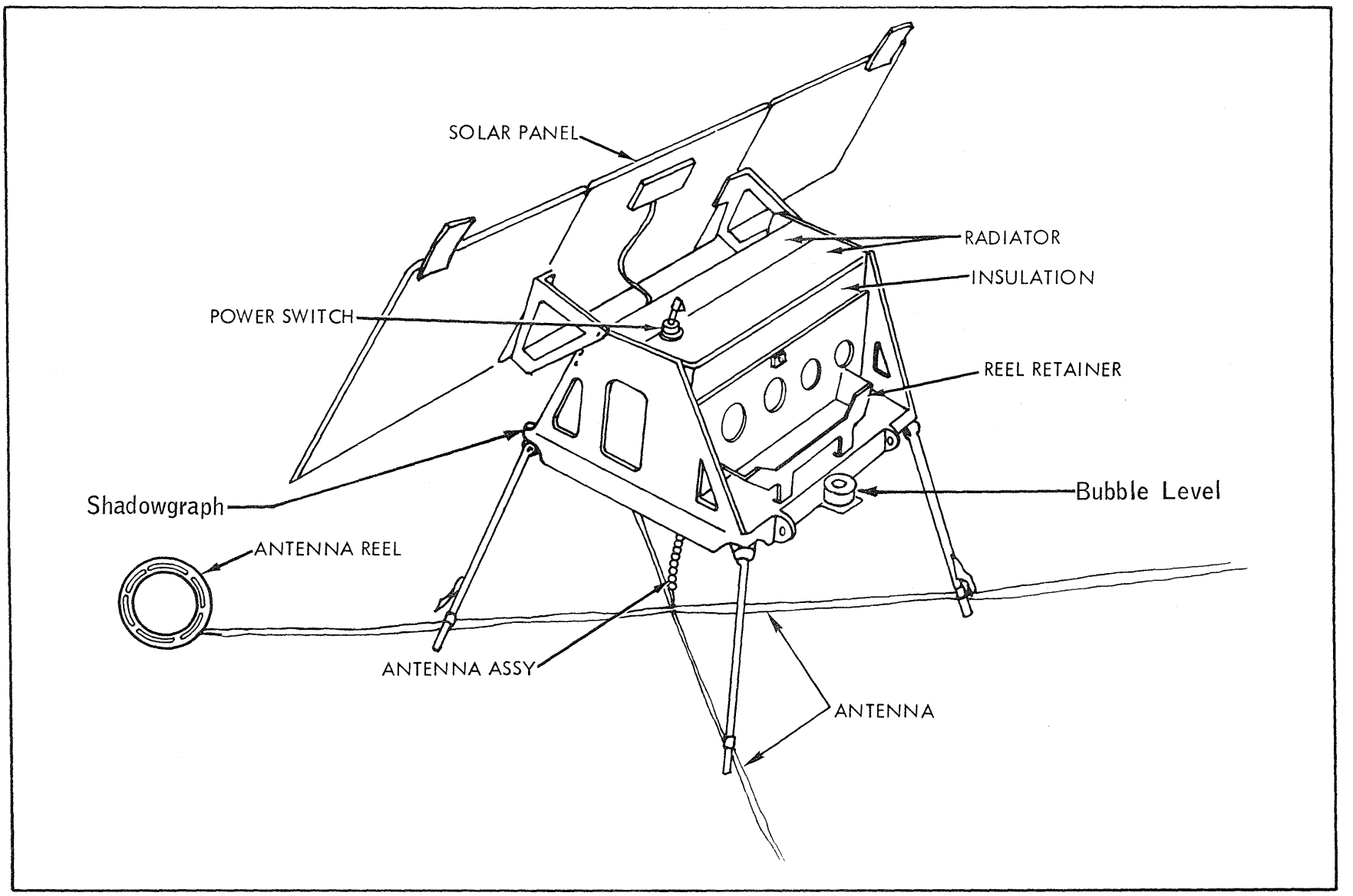

Figure 21 SEP Transmitter Deployed

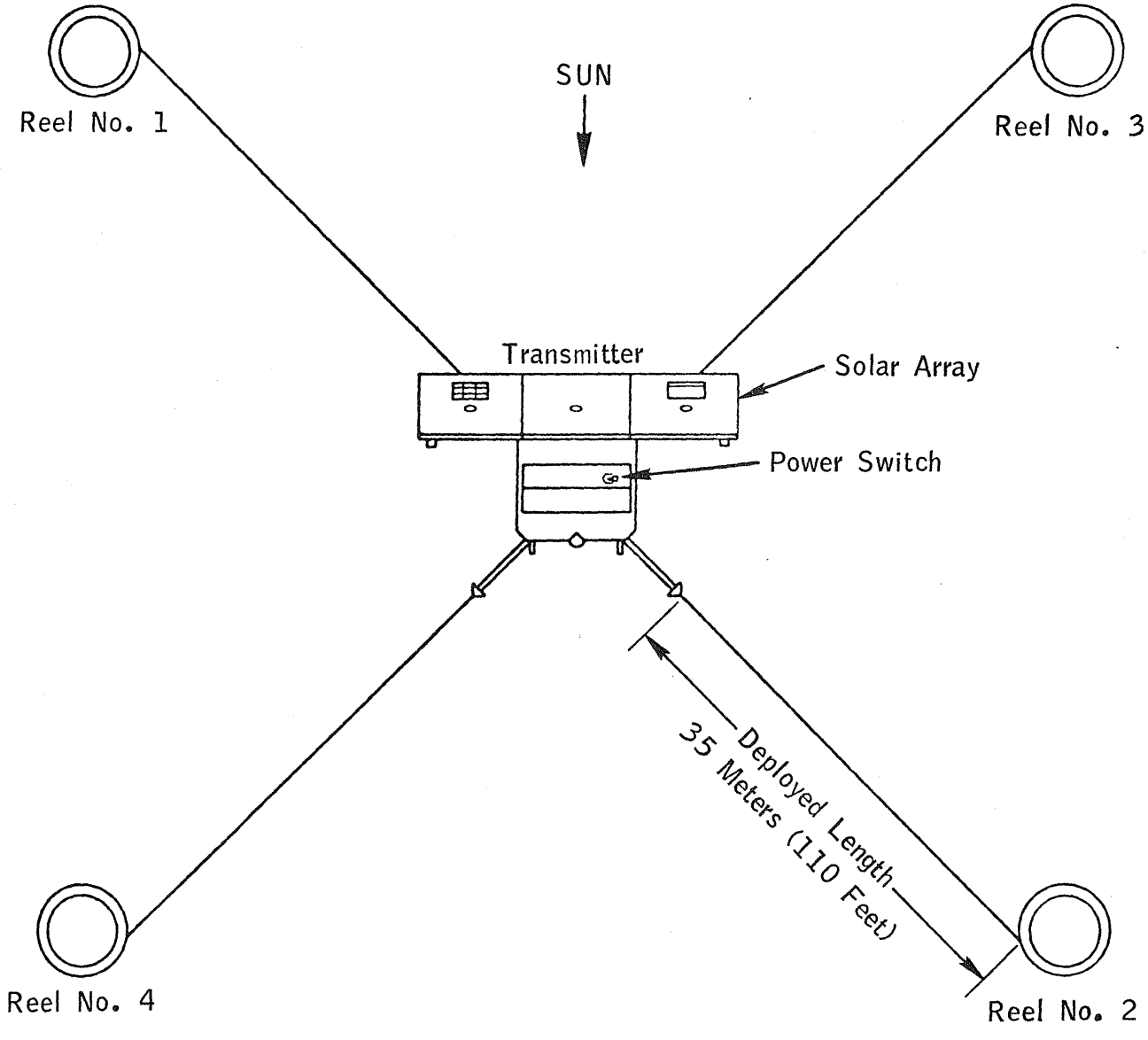

Figure 22 SEP Transmitter and Antennas Deployed

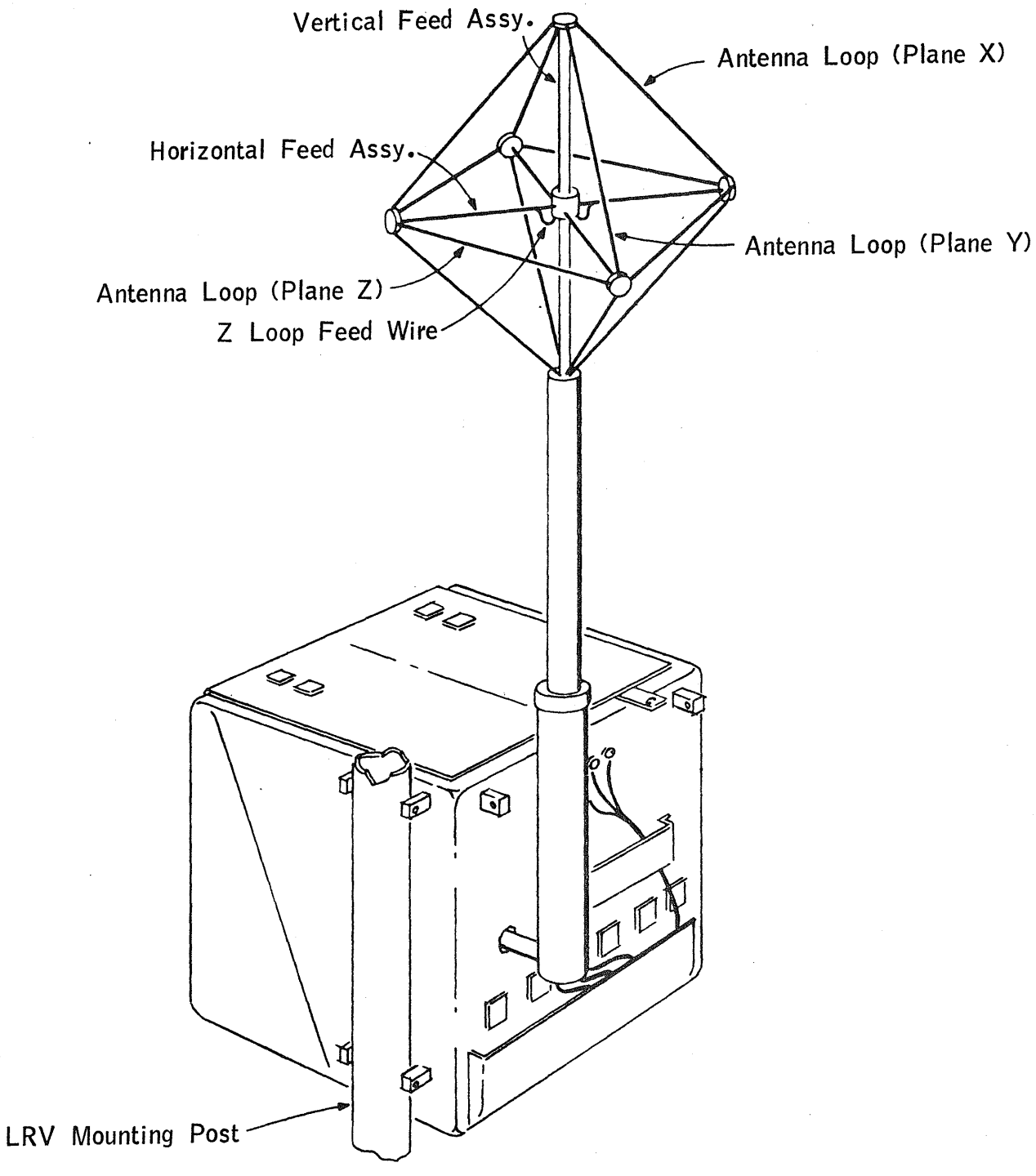

Figure 23 SEP Receiver and Antenna Deployed

TRAVERSE GRAVIMETER DEPLOYMENT CRITERIA

PARAMETER	CRITERIA
Initial Deployment	The TGE should remain in the Quad III equipment bay no longer than 16 hours or overheating of the TGE circuits may occur. Remove the pallet from the Quad III equipment bay and install it on the LRV. Remove and dispose of launch latches from the display and radiator covers. Place the ON/STBY switch, located under the TGE display panel protective cover, to the ON position. Ensure that the display panel protective cover is closed. Approximately 90 seconds warm-up time should be allowed before continuing to a measurement cycle. Remove TGE from flight position on the pallet. Place the TGE on the lunar surface, oriented so that it is shaded from the sun until immediately prior to the EVA #1 LRV traverse.
Initial Measurements	Early during EVA #1, make one gravity measurement and then one bias measurement on the lunar surface in the vicinity of the LM, followed by a gravity measurement after the TGE has been placed in its traverse position on the LRV. A gravity measurement is taken as follows: a) Press the GRAV pushbutton to initiate the measurement cycle. b) For a gravity measurement, the MEAS indicator light on top of the display panel cover should flash for 0 to 20 seconds, indicating that the TGE is in its leveling cycle. If the indicator light continues to flash, the TGE base is positioned more than 15 degrees off horizontal and the leveling loops cannot properly level the VSA assembly. If this is the case, the TGE should be realigned. c) When the MEAS indicator light stops flashing and is steadily illuminated, this indicates that the leveling cycle is complete and the TGE is in a measurement cycle.

TRAVERSE GRAVIMETER DEPLOYMENT CRITERIA (Concluded)

PARAMETER	CRITERIA
Initial Measurements (Continued)	The operator should not touch the TGE while the MEAS indicator light is illuminated. A vibration may cause the GRAVITY display to output a reading of 000 as the first three digits when the READ pushbutton is pressed. d) When the MEAS indicator light goes off, this indicates that the measurement cycle is complete. Open the display panel cover. Press READ pushbutton to initiate display of the Gravity measurement and the temperature information. If seven zeroes are displayed in the GRAVITY/BIAS display, the TGE is positioned more than 15 degrees off horizontal and must be realigned. The GRAVITY/BIAS and TEMP displays will illuminate for 15 seconds. The displays may be reactivated by pressing READ again. The astronaut will read the 9-digit display and report it to MCC. A Bias measurement is taken as follows: a) Press the BIAS pushbutton to initiate the measurement cycle. b) For a Bias measurement, the LEVEL/MEASURE indicator light on top of the display panel cover should flash for 90 to 110 seconds, indicating that the TGE is in its leveling cycle. Otherwise, indicator light operation is the same as for a Gravity measurement. c) When the MEAS indicator light goes off, press the READ pushbutton and report the 9-digit reading to MCC. Install the TGE in the Traverse position on the LRV and take another Gravity measurement according to the same procedure followed for a Gravity measurement on the lunar surface.

TRAVERSE GRAVIMETER DEPLOYMENT CRITERIA (Concluded)

PARAMETER	CRITERIA
Normal Traverse Operations	Prior to each traverse, make a Gravity measurement in the vicinity of the LM. Make a Gravity measurement at each LRV science stop on each of the three EVA's. Report to MCC the gravity reading and the time when the measurement was initiated. Upon return to the LM at the end of each traverse, remove the TGE from the LRV and place the unit in the shade of the LM. Take a Gravity measurement and relay the results back to Earth. If required, open the radiator to allow the TGE to cool down. NOTE: A Bias measurement will normally be taken only once, at the beginning of the first EVA traverse. However, should an unexpected event happen to the TGE such as dropping it, banging it, or insulation damage, a Bias measurement may have to be made after this event to determine TGE performance. Place the ON/STBY switch, located under the display panel cover, to the STBY position during the traverse recovery period. Prior to the next traverse, place the TGE ON/STBY switch to ON.
Photographs	At each science stop on the three traverses where TGE measurements are taken, a series of panoramic photos are required to allow the determination of the coordinates of each TGE measurement site. (Same as the S-59 requirement.) Orbital photos taken with the Panoramic Camera and the Mapping Camera are also required. The horizontal position accuracy in two coordinates must be known within ± 25 meters at the furthest position from the LM. The elevation control must be accurate to ± 14 meters relative to the LM datum plane over the entire traverse. A goal for inter-station elevation is ± 2 meters.

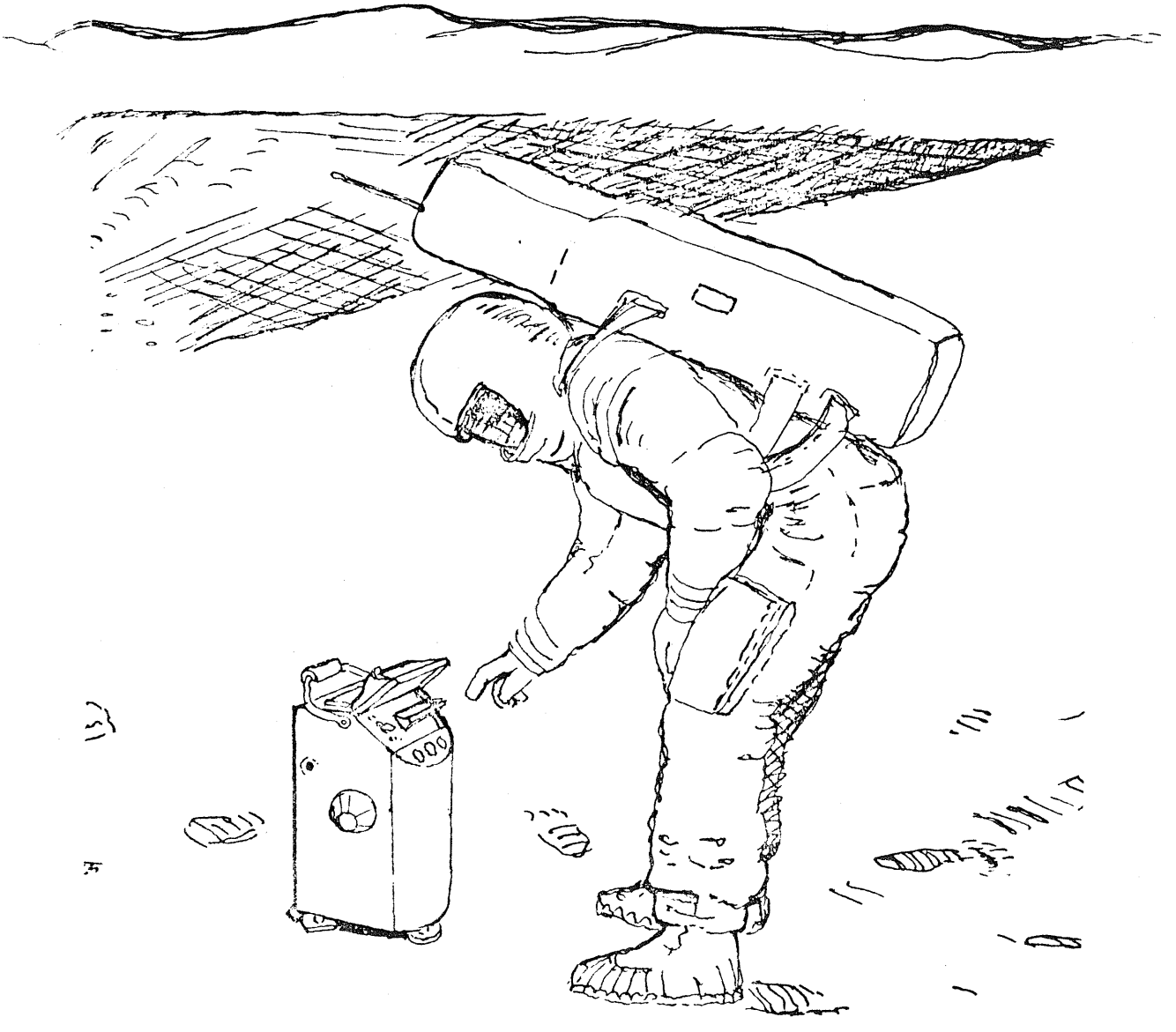

Figure 24 Traverse Gravimeter Deployed on Lunar Surface

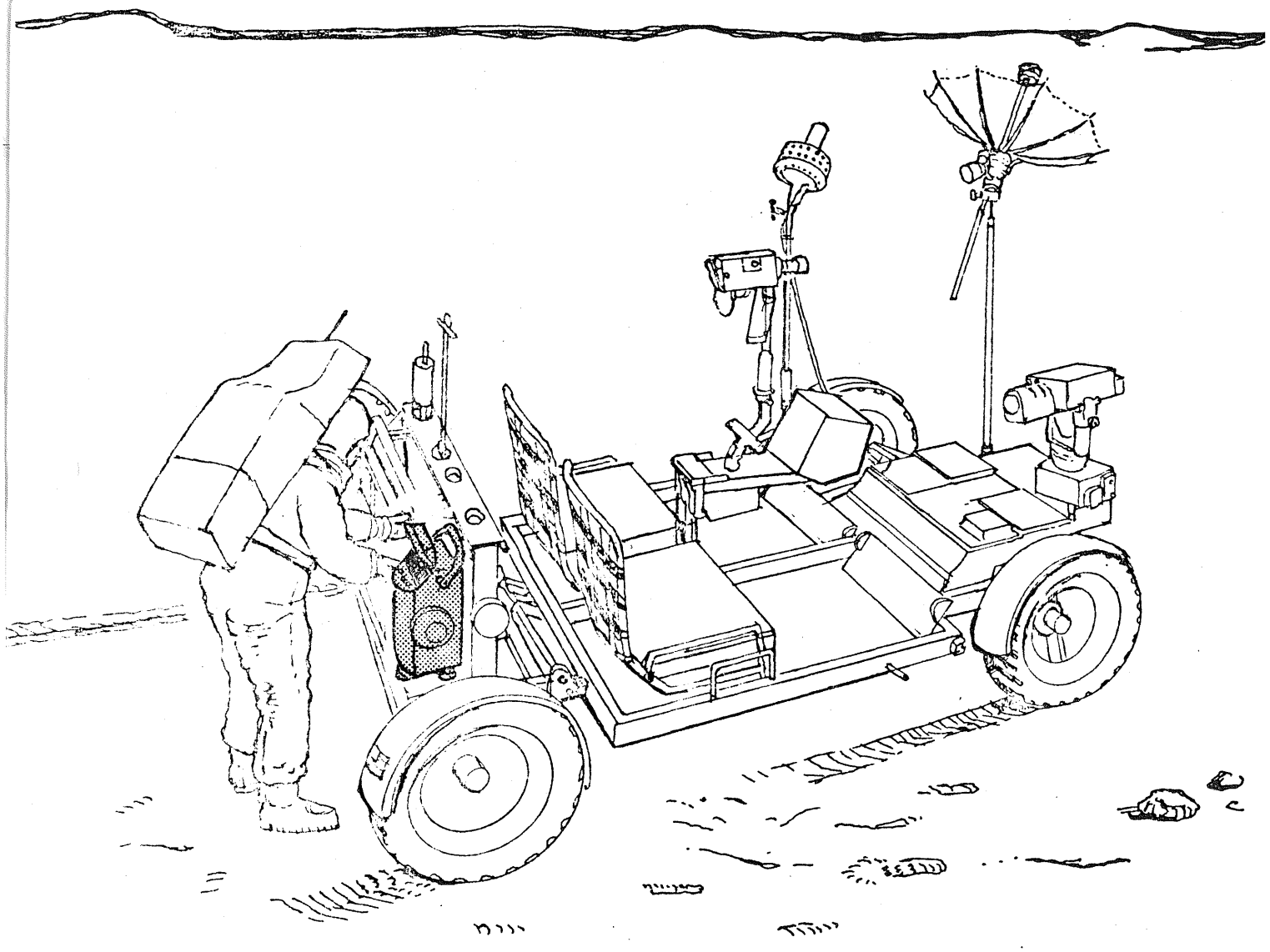

Figure 25 Traverse Gravimeter Deployed on LRV

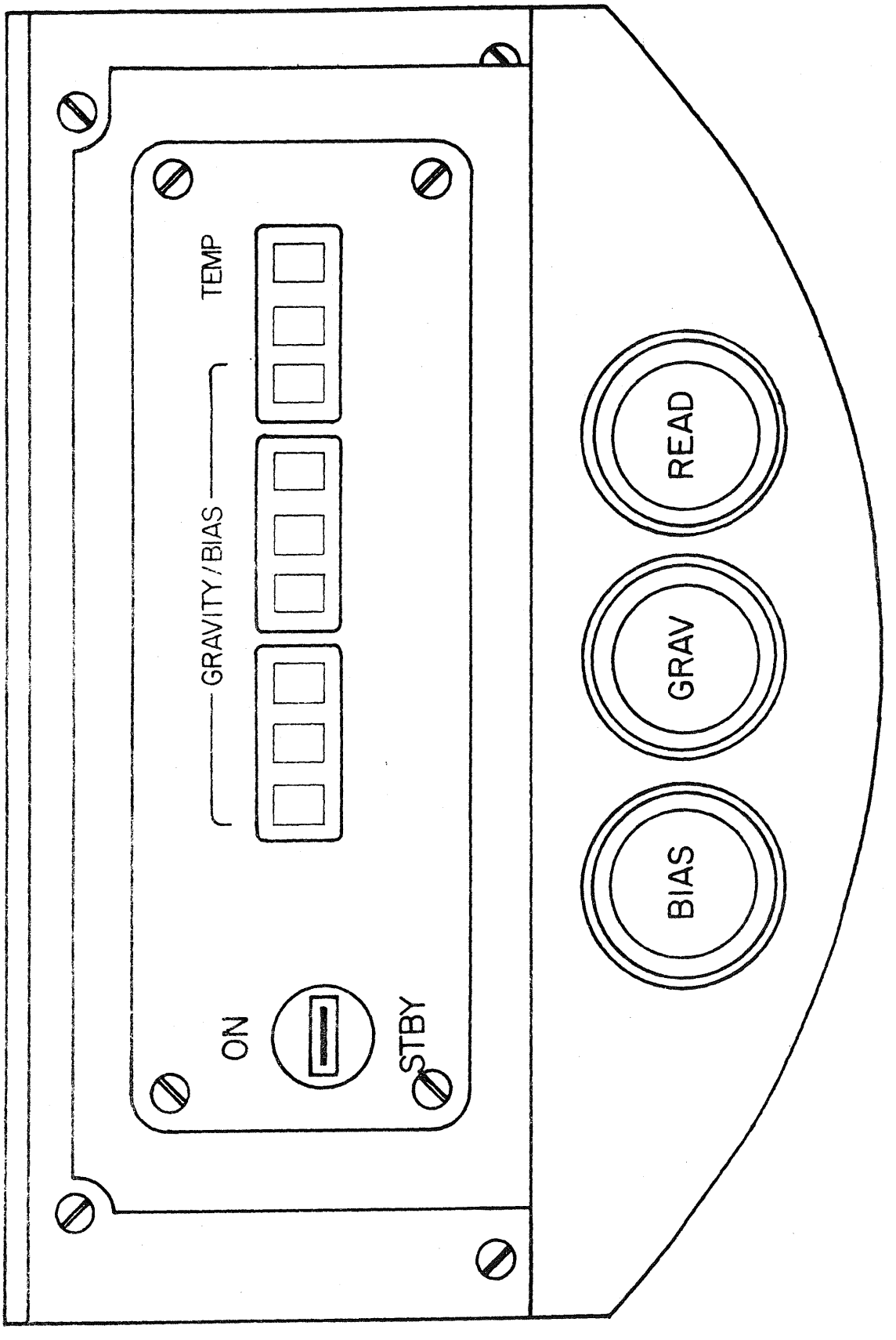

Figure 26 Traverse Gravimeter, Control and Display Panel

LNPE (LUNAR NEUTRON PROBE EXPERIMENT) DEPLOYMENT CRITERIA

PARAMETER	CRITERIA
Site Selection	The site chosen for the LNPE is determined by the site chosen for the Deep Drill Core Sample (part of the Lunar Geology Investigation). The LNPE must be at least 25 meters from the RTG when deployed. The LNPE should be shielded from the RTG by natural lunar features if possible; i.e., behind a boulder or in a small crater.
Thermal Protection	The LNPE is stowed on the MESA to the moon. The LNPE is stowed on the LRV for transportation to the deployment site, and should be wrapped in some form of thermal protection (i.e., pallet thermal blanket) and/or keep shaded from direct sunlight. The upper red-line temperature limit for the plastic detector is 70°C (158°F).
Emplacement and Activation	The LNPE will be inserted into the 3.5-meter hole created by removal of the deep core sample. The treadle assembly will be placed over the hole to prevent cave-ins. Emplacement and activation of the LNPE will be accomplished during EVA #1, following the ALSD drilling operations. Unscrew the orange cap from the top of the lower probe section. Remove and discard the Teflon insert. Invert the cap and use it as a tool to depress and rotate the keyed heat (tang) at the top of the section 180° from the OFF to the ON position, thus aligning the Boron Target with the plastic detector and activating the lower section. When activated, the keyed head will pop up, exposing white portion of the probe's central rod. (The keyed head is at the upper portion of the central rod.) Put cap nearby for use later. Remove and discard dust cap from the bottom of the upper probe section. Screw the upper section to the lower section. Activate the upper section of the probe by depressing the lever on the upper handle and rotating the handle 180° clockwise from OFF to ON. This causes the Boron Target and plastic detector to become aligned.

LNPE (LUNAR NEUTRON PROBE EXPERIMENT) DEPLOYMENT CRITERIA

PARAMETER	CRITERIA
Emplacement and Activation (Cont'd)	Insert the 2-meter probe into the hole. The probe may be hammered in if necessary. The diameter of the upper handle of the probe is larger than the hole in the treadle (and diameter of core stem) so that the LNPE cannot drop below the lunar surface. Cover the emplaced LNPE with the thermal protection.
Retrieval	At the end of the final EVA, the probe will be removed from the hole and separated into two sections. Both sections must be rotated to the OFF postion. Reinstall the cap on top of the lower probe section. (The OFF position for the lower section is obtained by depressing the keyed head and rotating 180°. When this section is in the OFF position, an orange ring will be showing just below the keyed head of the central rod.) If required, the extension handle, treadle, and extractor tool may be used to remove the probe from the hole. Wrap the two probe sections in the thermal protection for return to the LM. At the LM the probe shall be placed in a storage bag for return to MSC and delivery to the PI.
Photographs	One photograph of the LNPE deployed in the lunar surface before it is covered by the thermal protection.

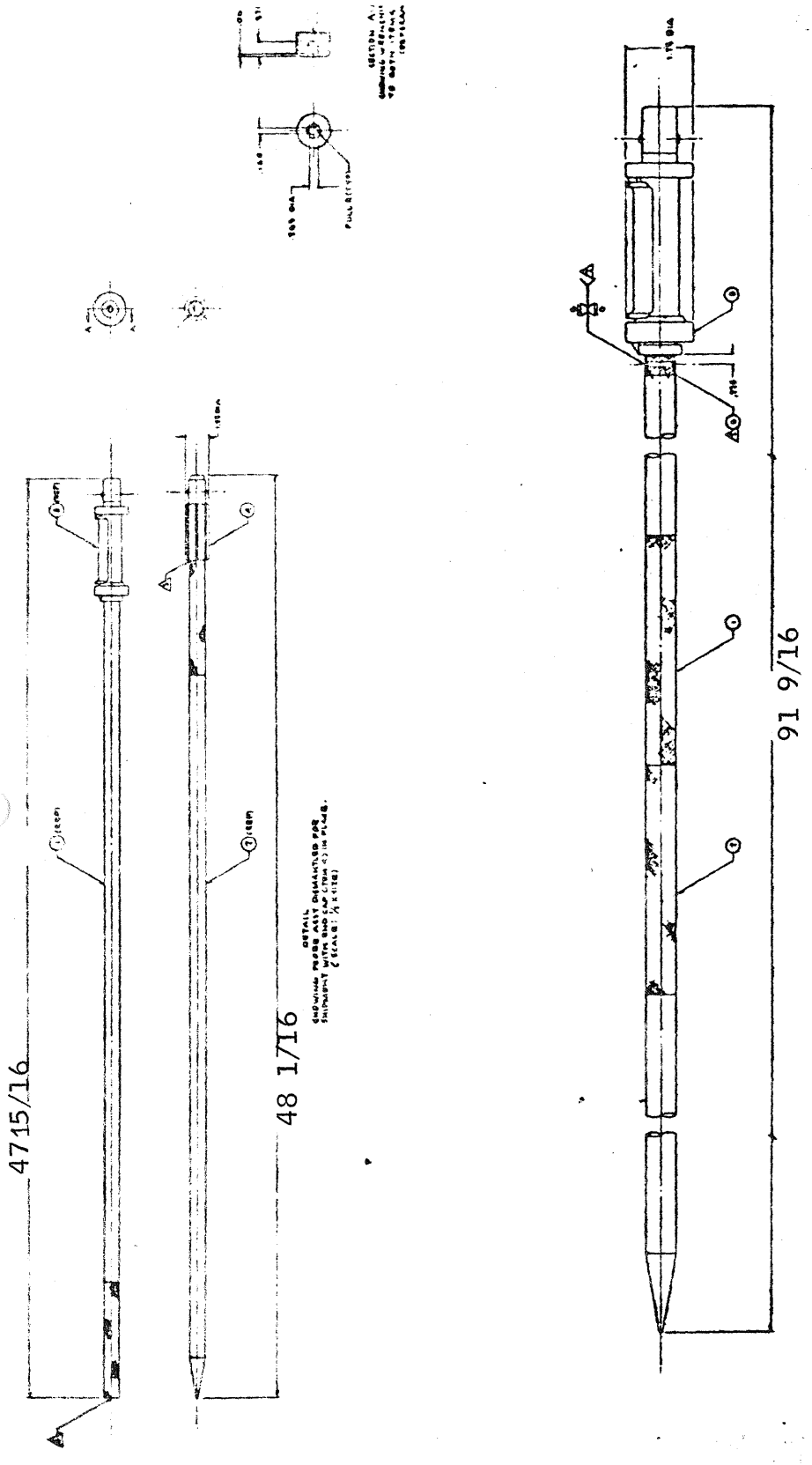

Figure 27 Lunar Neutron Probe Experiment