BARNES

NATIONAL AERONAUTICS AND SPACE ADMINISTRATION

APOLLO LUNAR SURFACE EXPERIMENTS PACKAGE SYSTEMS HANDBOOK

APOLLO 17

ALSEP 5
ARRAY E

AUGUST 8, 1972

PREPARED BY

FLIGHT CONTROL DIVISION

MANNED SPACECRAFT CENTER
HOUSTON, TEXAS

1 INTRODUCTORY INFORMATION

2 GENERAL DESCRIPTION

3 STRUCTURAL/ THERMAL CNTL SUBSYSTEM

4 ELECTRICAL POWER SUBSYSTEM

5 COMMAND SUBSYSTEM

6 TELEMETRY SUBSYSTEM

7 LUNAR MASS SPECTROMETER (S205)

8 LUNAR EJECTA AND METEORITE EXP (S202)

9 HEAT FLOW EXPERIMENT (S037)

10 LUNAR SURFACE GRAVIMETER (S207)

11 LUNAR SEISMIC PROFILING EXP (S203)

*

APOLLO LUNAR SURFACE EXPERIMENTS PACKAGE SYSTEMS HANDBOOK

ALSEP 5 - ARRAY E

APOLLO 17

DC-1

(DOCUMENT CHANGE 1)

PREFACE

This Document Change (DC) is being issued for the dual purpose of accomodating the first publication of Section 11, the Lunar Seismic Profiling Experiment (S203), and updating previously published data. All of this material, both new and revised (PCN-1), represents the Apollo Lunar Surface Experiments Package (ALSEP) Systems for ALSEP 5 ARRAY E as of October 6, 1972 and should be incorporated into the basic document dated August 8, 1972, according to the document change instruction sheet which follows this page.

This document change has been prepared by the Flight Control Division, NASA, Manned Spacecraft Center, Houston, Texas with technical support by LTV/Kentron Hawaii, Ltd.

This handbook as updated is intended for specialized use by experiment flight controllers in real-time and near-real-time operations.

Comments concerning this document should be directed to the Lunar/Earth Experiments Branch, Flight Control Division. Revisions will be issued as required prior to the flight date.

Approved by:

for Gerald D. Griffith
James E. Saultz
Chief, Lunar/Earth Exploration Branch

for Melvin F. Brooks
Eugene F. Kranz
Chief, Flight Control Division

*

APOLLO LUNAR SURFACE EXPERIMENTS PACKAGE SYSTEMS HANDBOOK

ALSEP 5 - ARRAY E

APOLLO 17

DC-1

DOCUMENT CHANGE INSTRUCTION SHEET

Update this document in accordance with the following instructions:

Remove and replace the following changed pages:

ii	5-32	6-29
iii	5-33	6-30
iv	5-36	6-31
v	5-38	6-32
3-1 (Fig 3-1)	5-41	6-33
3-3 (Dwg 3.2)	5-42	6-34
3-4 (Dwg 3.3)	5-43	6-35
4-3 (Fig 4-1)	5-44	6-36
4-7 (Dwg 4.2)	5-48	6-38 (Dwg 6.1)
4-8	5-54	6-39 (Dwg 6.2)
4-9	5-55	6-40 (Dwg 6.3)
4-12	5-56 (Dwg 5.1)	7-5
4-14	6-2	7-7 (Fig 7-2)
4-15	6-3	7-9 (Dwg 7.1)
5-3	6-4	7-10 (Dwg 7.2)
5-4	6-6	8-2
5-5	6-7	8-3
5-8	6-8	8-4
5-9	6-9	8-5
5-10	6-11	8-8 (Fig 8-3)
5-12	6-12	8-9 (Dwg 8.1)
5-16	6-13	10-1
5-18	6-18	10-3
5-19	6-20	10-4
5-27	6-21	10-6
5-29	6-26	10-7
5-30	6-27	10-9
5-31	6-28	10-11 (Dwg 10.1)

Add the following new pages:

iia	11-6	11-12 (Fig 11-3)
11-1	11-7	11-13 (Fig 11-4)
11-2	11-8	11-14 (Dwg 11.1)
11-3 (Fig 11-1)	11-9 (Fig 11-2)	11-15 (Dwg 11.2)
11-4	11-10	
11-5	11-11	

APOLLO LUNAR SURFACE EXPERIMENTS PACKAGE SYSTEMS HANDBOOK
ALSEP 5 ARRAY E
APOLLO 17

OCTOBER 6, 1972

TABLE OF CONTENTS AND ITEM EFFECTIVITY

*

APOLLO LUNAR SURFACE EXPERIMENTS PACKAGE SYSTEMS HANDBOOK 10/6/72 (Continued)

APOLLO LUNAR SURFACE EXPERIMENTS PACKAGE SYSTEMS HANDBOOK 10/6/72 (Concluded)

SECTION 1
INTRODUCTORY INFORMATION

1.1 ABBREVIATIONS AND ACRONYMS

NOTE

Due to reduction requirements, acronyms which would normally be in a lower case, for example, "dc," will appear in upper case on drawings. The text will, however, conform to NASA standards.

ac	alternating current
ACCPT	accept
ACK	acknowledge
A/DC	analog-to-digital converter
Adc	amperes dc
ADD	address
AGC	automatic gain control
ALHT	Apollo lunar hand tools
ALIGN	alignment
ALSD	Apollo lunar surface drill
ALSEP	Apollo Lunar Surface Experiments Package
A/F	automatic/forced
AMP	amplifier
AMPS	amperes
ANT	antenna
APP	approximate, approximately
ARM	armed
ASC	ascent
ASI	Apollo standard initiator
AUTO	automatic
AZ	azimuth
B1	bottom location of structure temperature
BAS	base
BER	bit error rate
BPS	bits per second
C	centigrade
CAL	calibrate
CALC	calculated
CB	circuit breaker
CBL	cable
CCGE/A, CCGE/D	analog and digital ID readout from CCGE
CCIG	Cold Cathode Ion Gage (instrument portion of CCGE)
CCW	counterclockwise
CH	channel
CH	change
CLD	cold
CMD	command
CNT	count
CNTS	counts
CNTR	counter
COMM	communications
CONV	converter

CPS	cycles per second
CS	central station
CTL	control
CUR	current
CVR	cover
CVR/S	cover and seal (used on SIDE)
CVW	command verification word
CW	clockwise
db	decibels
dbm	decibels with respect to one milliwatt
dc	direct current
DDP	digital data processor
DEC	decoder
DECR	decrease
DEF	deflection
DEG	degrees
DESC	descent
DET	detector
DIG	digital
DIR	direction
DIR/V	direction and speed (used on PSE)
DISSIP	dissipation
DLAY	delay
D/P	data processor
DPLY	deploy
DRT	dome removal tool
DSS	Data Subsystem
DSS/A	Analog Data Processor
DSS/D	Digital Data Processor
DSS/PROC	Complete Data Processor (Redundant)
EGFU	Electronics/Gimbal-Flip Unit
ENBL	enable
ENGR	engineering
EPS	Electrical Power System
eV	electron volts
EXP	experiment
EXT	external
F	fuse
F	Fahrenheit
FET	field effect transistor
FILT	filter
FLD	field
FREQ	frequency
FTT	fuel transfer tool
FWD	forward
GDT	gradient sensor delta temperatures (HFE)
GEO	geophone
GLA	Grenade Launch Assembly (a component of ASE)
GMBL	gimbal
GND	ground
GT	gradient sensor ambient temperatures (HFE)

HBR	high bit rate
HE	high explosive (ASE grenades)
HECPA	High-Energy Curved-Plate Analyzer (a component of SIDE)
HFE	Heat Flow Experiment
HI	high
HTR	heater: On HFE there are two cases: HTR/HK High Conductivity Heater HTR/LK Low Conductivity Heater
HS	heat sink
HV	high voltage
Hz	hertz
ID	identification
IN	input
INCR	increase
IND	indication
INHIB	inhibit
INIT	initiate
INST	instrument
INSUL	insulation
INT	internal
K	Kelvin
kbps	kilobits per second
kc	kilocycles
kHz	kilohertz
kV	kilovolts
LAT	latitude
LBR	low bit rate
LEAM	Lunar Ejecta and Meteorite Experiment
LECPA	Low-Energy Curved-Plate Analyzer (a component of SIDE)
LIM	limit
LM	Lunar Module
LMS	Lunar Mass Spectrometer Experiment
LO	low
LONG	longitude
L/O	local oscillator
LOS	loss of signal
LP	long period (PSE sensors)
LSB	least significant bit
LSD	least significant data
LSG	Lunar Surface Gravimeter Experiment
LSP	Lunar Seismic Profiling Experiment
LVL	level
mA	milliampere
mAdc	milliamperes dc
MAP	message acceptance pulse
MAX	maximum
Mc	megacycle
MCC	Mission Control Center
MDE	mode
MEAS	measurement
MeV	million electron volts
MHz	megahertz

MIN	minimum
MOCR	Mission Operations Control Room
MOD	module
MODE	operating modes are defined as follows: For HFE MODE/G gradient mode MODE/HK high conductivity mode MODE/LK low conductivity mode
ms	millisecond
MSB	most significant bit
MSD	most significant data
MSP	measurement sequence programer
MSFN	Manned Space Flight Network
MTR	motor; on PSE, the three motors are MTRX, MTRY, and MTRZ
MUX	multiplexer or multiplex
mV	millivolts
mW/cm^2	milliwatts per square centimeter
nA	nanoamperes
N/A	not applicable
NBR	normal bit rate
NEG	negative
NORM	normal
NRZC	Non-Return to Zero Type C (Change)
OPER	operate
O/S	offset
OSC	oscillator
O/T	one-time
OUT	output
PA	power amplifier
pA	picoamperes
PCM	pulse code modulation
PCT	percent
PCU	Power Conditioning Unit
PDM	Power Dissipation Module
PDR	power dissipation resistor
PDU	Power Distribution Unit
PET	package elapsed time
PHYS	physical; on CPE used as follows: PHY/AN Physical Analyzer (sensor assembly)
PKG	package
PL	plane
PLT	plate
PM	phase modulation
POS	positive
POSN	position
PRE/LIM	prelimiting
PRE/REG	preregulator (a component of the SIDE power supply)
PRI	primary; on ALSEP used as follows: PRI/ST primary structure
P/S	power supply
PWR	power
R	resistor (used as R1 and R2)
RCVD	received

*

RCVR	receiver
RDT	ring sensor delta temperature (HFE)
REF	reference
REG	regulator (also used as "register" on ALSEP)
REV	reverse
RF	radio frequency
RLY	relay
R/S	remote site
RST	reset
RT	rate (as in BIT RT, CNT RT, etc.)
RT	ring sensor ambient temperatures (HFE)
RTC	real-time command
RTE	real-time event
RTG	Radioisotope Thermoelectric Generator
SCI	scientific
SEC	second
SEL	select
SEQ	sequence, sequential; used on HFE as: SEQ/FUL Full Sequence SEQ/P1 Probe 1 Sequence SEQ/P2 Probe 2 Sequence Used on ASE as: SEQ/S Sequential Single
SEQ	scientific equipment
SIG	signal
SLA	Spacecraft Lunar Module Adapter
SNSR	sensor
SP	short period (PSE sensor)
SPST	single pole single throw
STA	status
STBY	standby
S/S	samples per second, signal strength
S/T	structural/thermal
SYNC	synchronization
SW	switch
SUP	supply
SYS	system
T	temperature (also used as "thermal" on ALSEP)
TC	thermocouple (on HFE, four cable ambient temperatures are read on each probe)
T/D	time delay
TEMP	temperature
THERM	thermal
TM	telemetry
UHT	Universal Handling Tool
USB	unified S-band
V	volts, velocity (used to indicate "speed" on PSE in "LVL DIR/V")
Vac	volts ac
Vdc	volts dc
VCO	voltage controlled oscillator
V/FILT	Velocity Filter, a component of SIDE
VWE	verification word enable

W	watts
W1, W2, W3	wall locations of structure temperature sensors
XMTR	transmitter
XTAL	crystal
XYZ, XYO	axes of LSM, where XYO indicates X, or Y, or neither
ϕ	phase

1.2 DRAWING SYMBOL STANDARDS

1.2.1 GENERAL DRAWING INFORMATION

A. ZONE REFERENCE

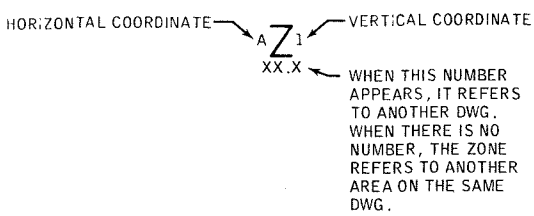

B. POWER INTRA-DRAWING ZONE REFERENCE

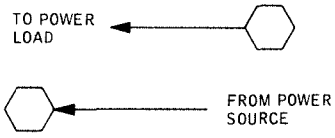

C. SYSTEM INTERCONNECT

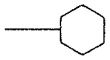

D. DRAWING NOTE REFERENCE

1.2.2 LINE LEGEND

A. RF CABLE

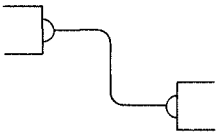

B. ELECTRICAL LINE, POWER AND CONTROL

1. ELECTRICAL, CONNECTED

2. ELECTRICAL, CROSSOVER

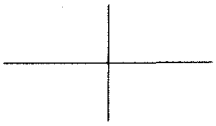

C. DIRECTIONAL FLOW ARROWS

D. COMPONENT ENCLOSURES (TYPICAL)

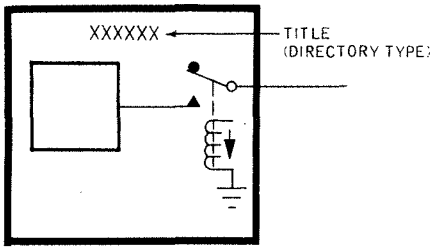

1. MAIN ENCLOSURE — 1/16-INCH SOLID BLACK LINE
2. SUB ENCLOSURE — 1/32-INCH SOLID BLACK LINE
3. COMPONENT ENCLOSURE WITH CREW (MANUAL CONTROL) — 1/16-INCH DASHED BLACK LINE
4. EXPERIMENT INTERFACE — 1/8-INCH DASHED BLACK LINE

E. MECHANICAL LINKAGE

F. TIMING PULSES

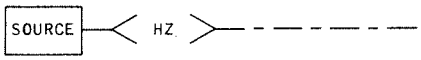

G. TWO-UNIT INTERFACE

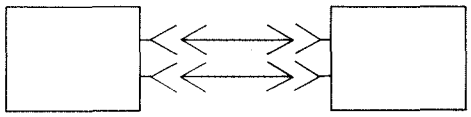

1.2.3 TELEMETRY SYMBOLS

A. MEASUREMENTS TELEMETERED

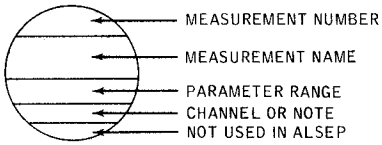

B. METERS

C. SINGLE SOURCE SENSOR

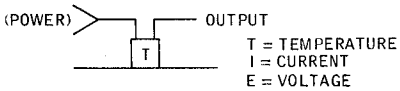

D. COMMANDS

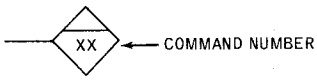

1.2.4 ELECTRICAL SYMBOLS

A. SWITCHES

1. MOMENTARY CONTACT

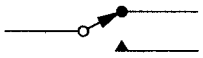

2. LATCHING CONTACT

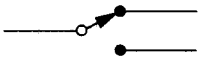

3. SOLID PUSHBUTTON

(PUSH TO OPEN)

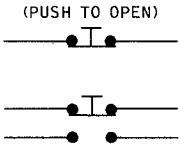

B. FUSES

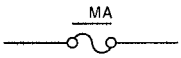

C. RELAYS

1. MOMENTARY CONTACTS

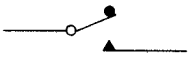

2. LATCHING CONTACTS

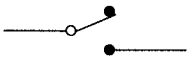

3. NON-LATCHING RELAY SHOWN IN DE-ENERGIZED POSITION

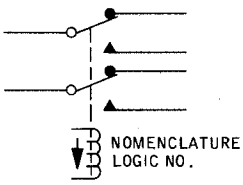

4. LATCHING RELAY

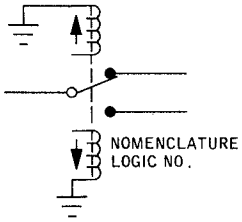

D. RELAY OR SOLENOID DRIVER

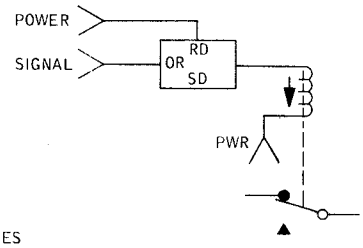

E. BUSES

1. SYMBOL (LENGTH MAY VARY)

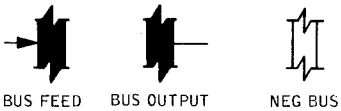

2. DESIGNATION

V_{XXX}

F. GROUNDS

1. SYSTEM

2. FLOATING OR CONTROLLED

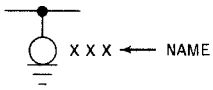

G. TRANSFORMERS

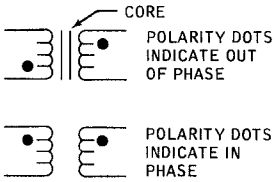

H. CAPACITOR

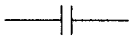

I. DIGITAL INVERTER

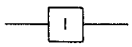

J. GATES

1. AND

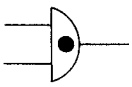

2. NAND

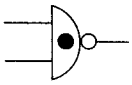

3. OR

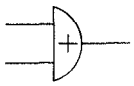

4. NOR

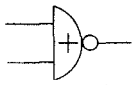

K. TIME DELAY

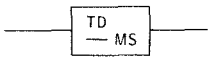

L. ELECTRICAL FILTER

M. MODULATOR

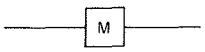

N. DEMODULATOR

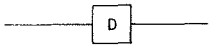

O. TRANSISTORS

1. NPN

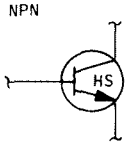

NOTE: WHEN SHOWN, HS DENOTES HEAT SINK MOUNTED.

2. PNP

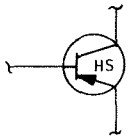

3. UNIJUNCTION TRANSISTOR (UJT)

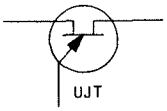

P. NON-AMPLIFYING DEVICE, IDENTIFIED

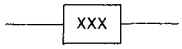

Q. DIODES

1. GENERAL

2. ZENER

3. CONTROL RECTIFIER

R. POTENTIOMETER

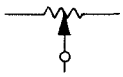

S. HEATER

T. FIXED RESISTOR

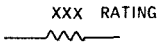

U. THERMISTOR

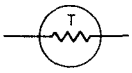

V. THERMOSTAT

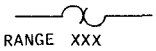

W. ANTENNA

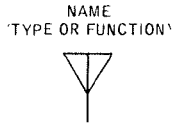

X. PHOTOELECTRIC CELL

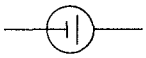

Y. AMPLIFIER

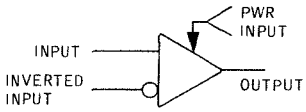

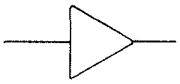

DC, PRE-, OR BUFFER AMPLIFIER AS INDICATED

Z. CIRCUIT BREAKERS

1. AUTOMATIC

2. TWO-POLE, DOUBLE-THROW, AUTOMATIC

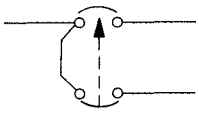

1.2.5 PYROTECHNIC SYMBOLS

A. EXPLOSIVE INITIATOR

1.2.6 SPECIAL ALSEP SYMBOLS

A. ASTRO SWITCHES

1. ASTRONAUT SWITCH 1

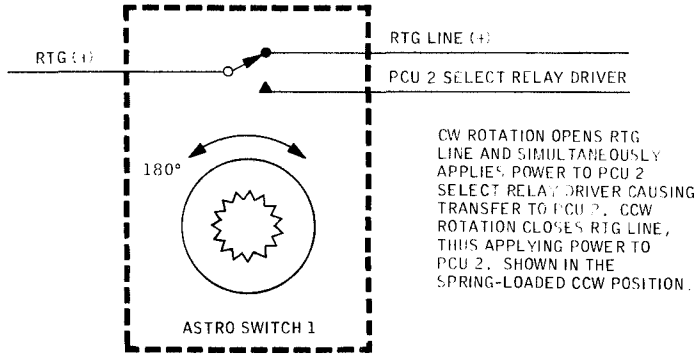

2. ASTRONAUT SWITCH 2

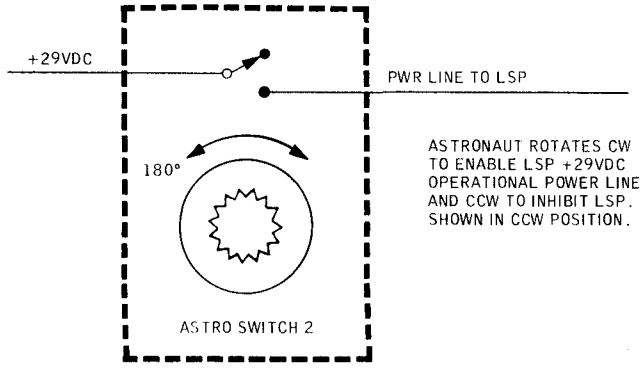

B. HEAT FLOW EXPERIMENT PROBE SECTION

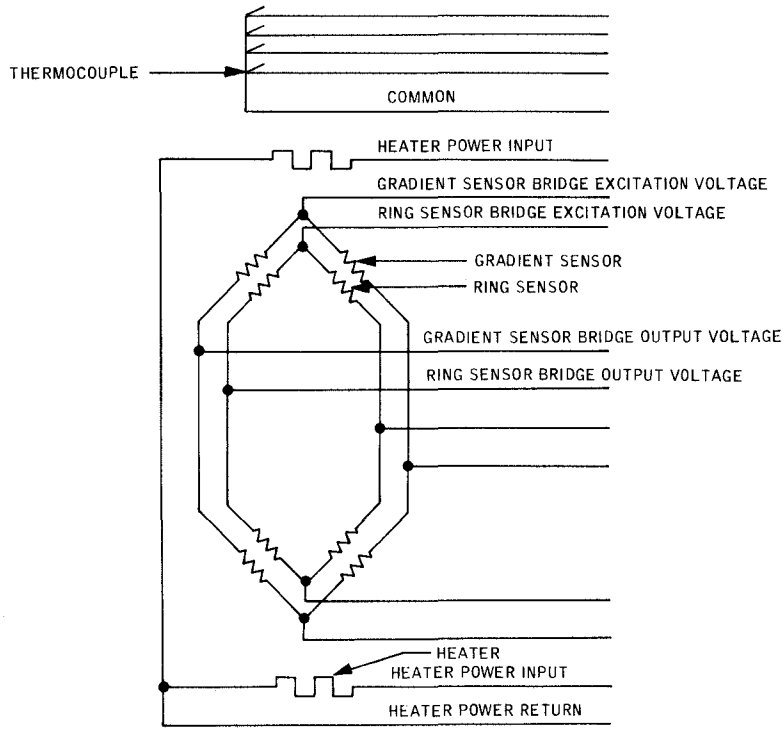

*

SECTION 2
GENERAL DESCRIPTION

2.1 ALSEP DESCRIPTION

The Apollo Lunar Surface Experiments Package (ALSEP 5) Array E system consists of five scientific instruments to be placed on the moon's surface by the Apollo 17 flight crew. The instruments have been designed to remain on the moon to collect and transmit data continuously for two years. The design goal for ALSEP 5 is five years.

For self-sufficient operations, the ALSEP 5 package includes a nuclear power supply, mechanical support, thermal protection, and data handling equipment. These supporting subsystems provide a central station containing the electrical power, command, telemetry, and structural/thermal subsystems. The central station operates the following experiment subsystems; lunar surface gravimeter, lunar mass spectrometer, lunar seismic profiling, lunar ejecta and meteorites, and heat flow.

With the exception of heat flow, the only experiment flown previous to Apollo 17, ALSEP 5 experiments represent the second generation of lunar scientific measurement.

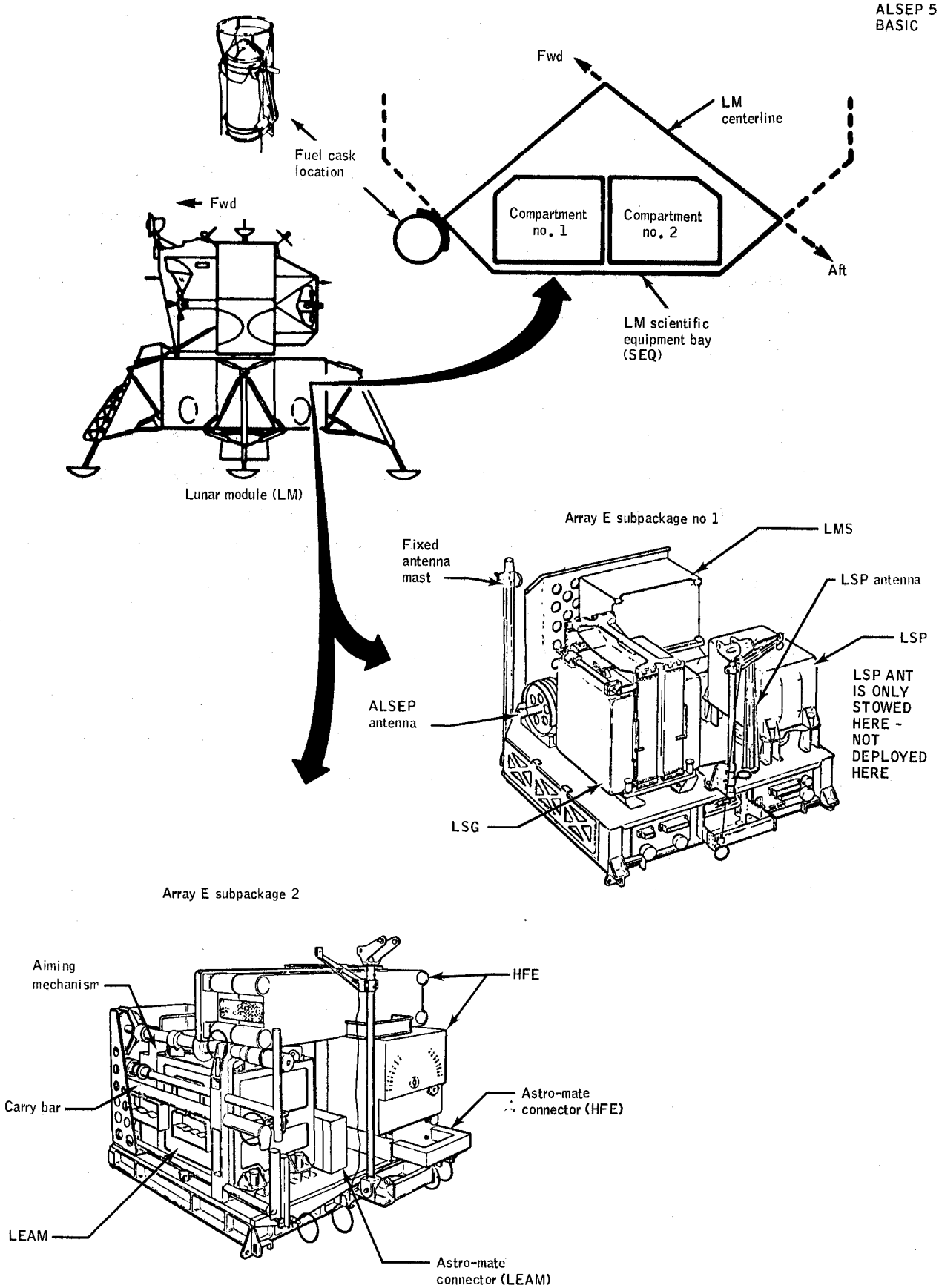

Figure 2-1.- ALSEP/LM interface.

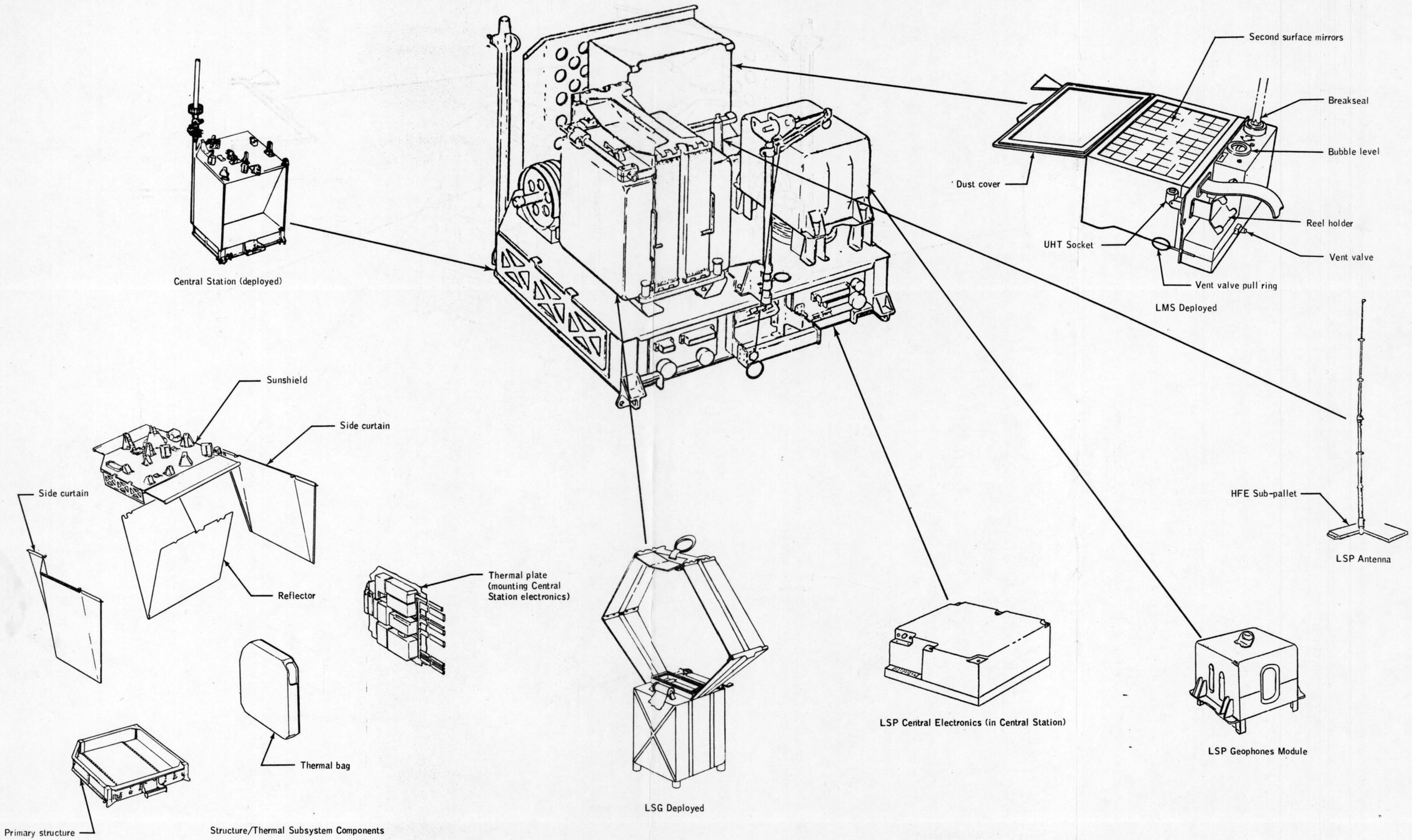

Figure 2-2.- Array E subpackage 1.

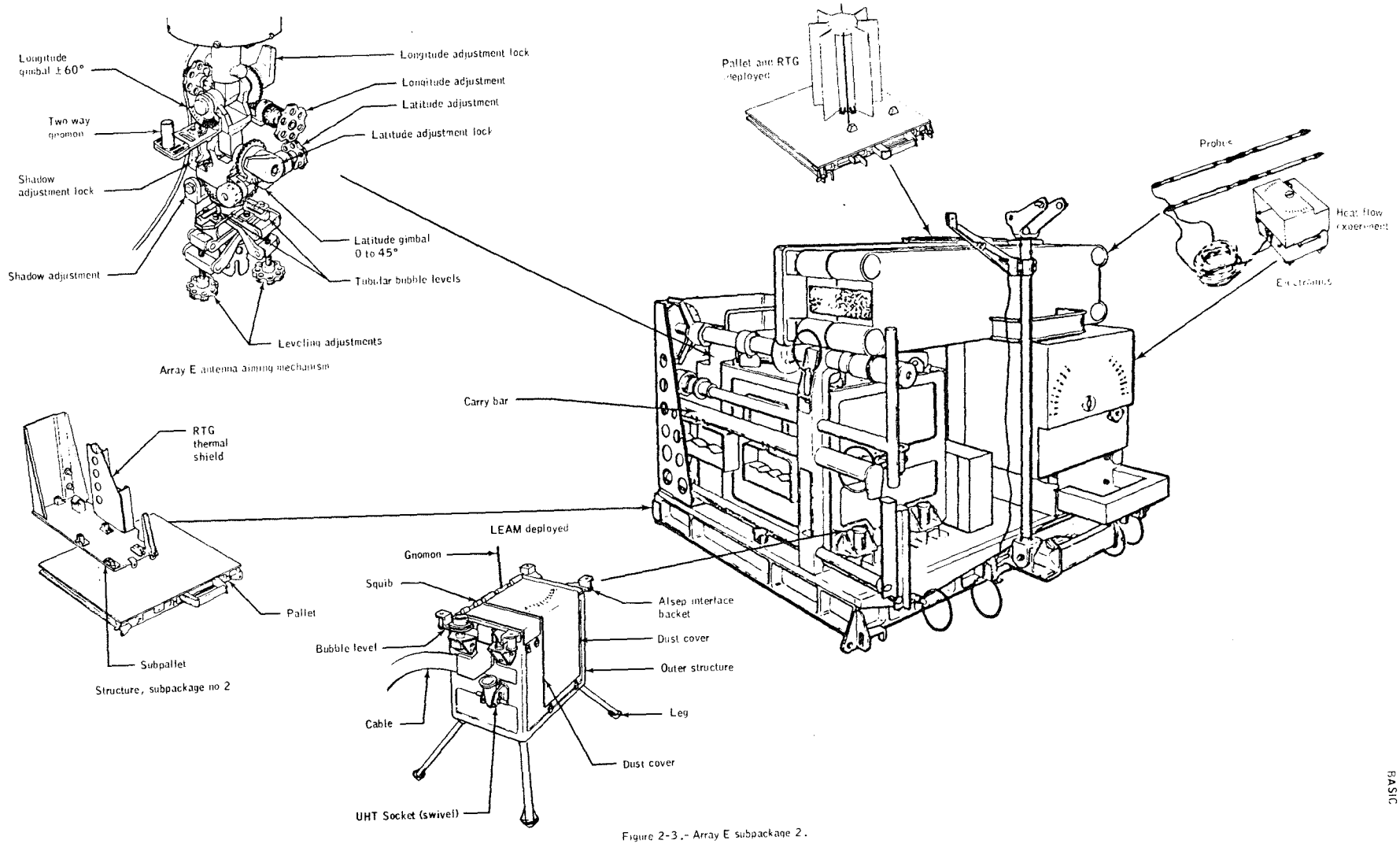

Figure 2-3.- Array E subpackage 2.

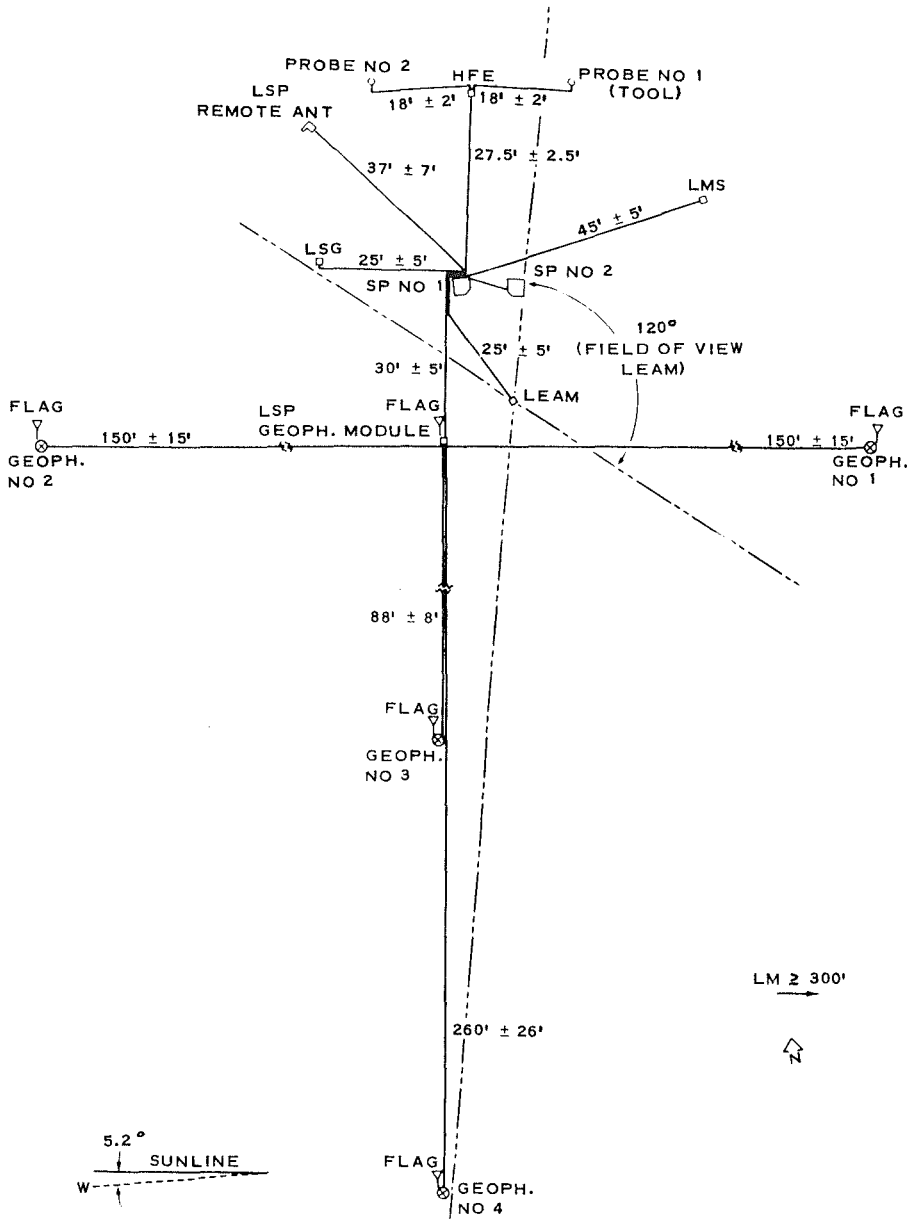

Figure 2-4.- Typical array E deployment geometry.

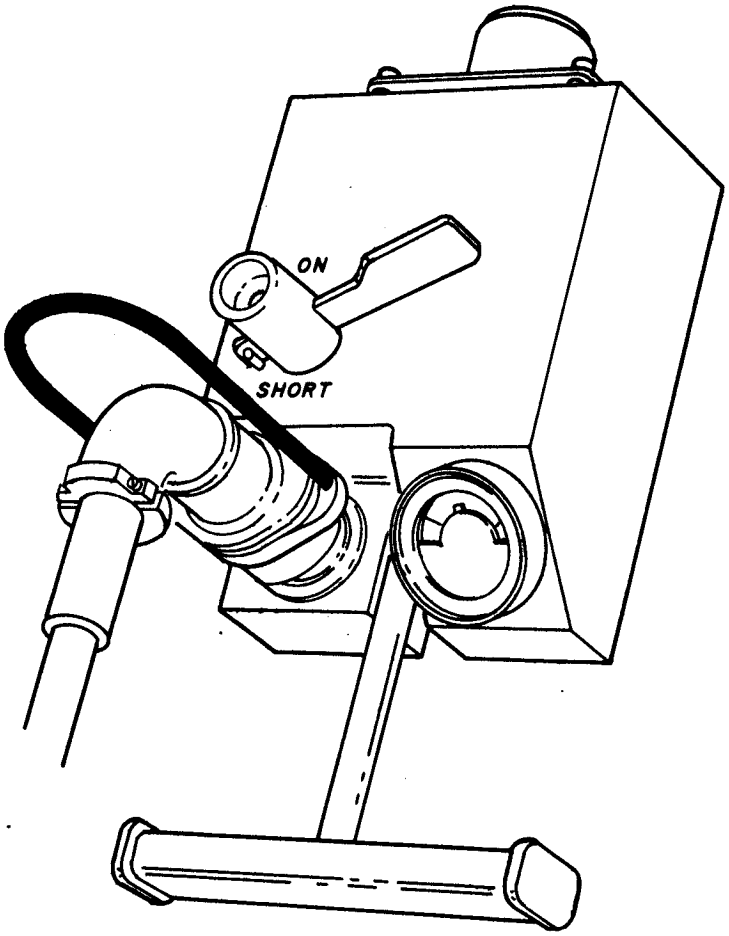

Figure 3-1.- Array E shorting plug.

LTR	PCN	DR	ENGR	DATE	APPROVAL

COMMENTS:

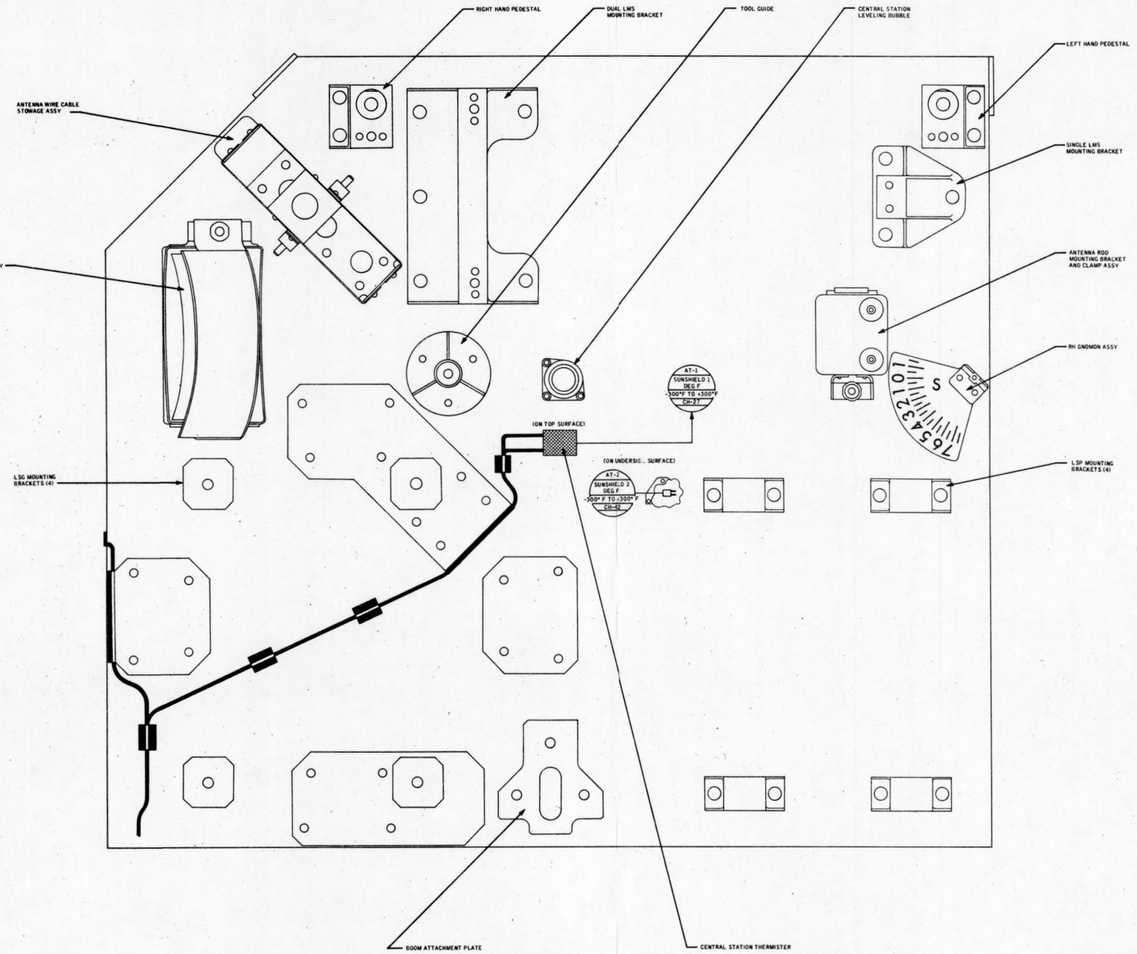

SIGNATURES	DATE
DR R. J. Hooper	2-17-71
DSGN R. J. Hooper	2-17-71
QC	
ENGR William Johnson	2-2-71
ENGR	
APP Jack L. Bartlett	2-2-71
APP	
STC Bill Crenshaw	2-2-71

NATIONAL AERONAUTICS & SPACE ADMINISTRATION
MANNED SPACECRAFT CENTER - HOUSTON, TEXAS

SUNSHIELD

ALSEP 5
APOLLO 17

DWG NO 3.1

SIZE X 34 | PAGE 3-2 | SHEET 1 OF 1

LTR	PCN	DR	ENGR	DATE	APPROVAL
	1				

COMMENTS:

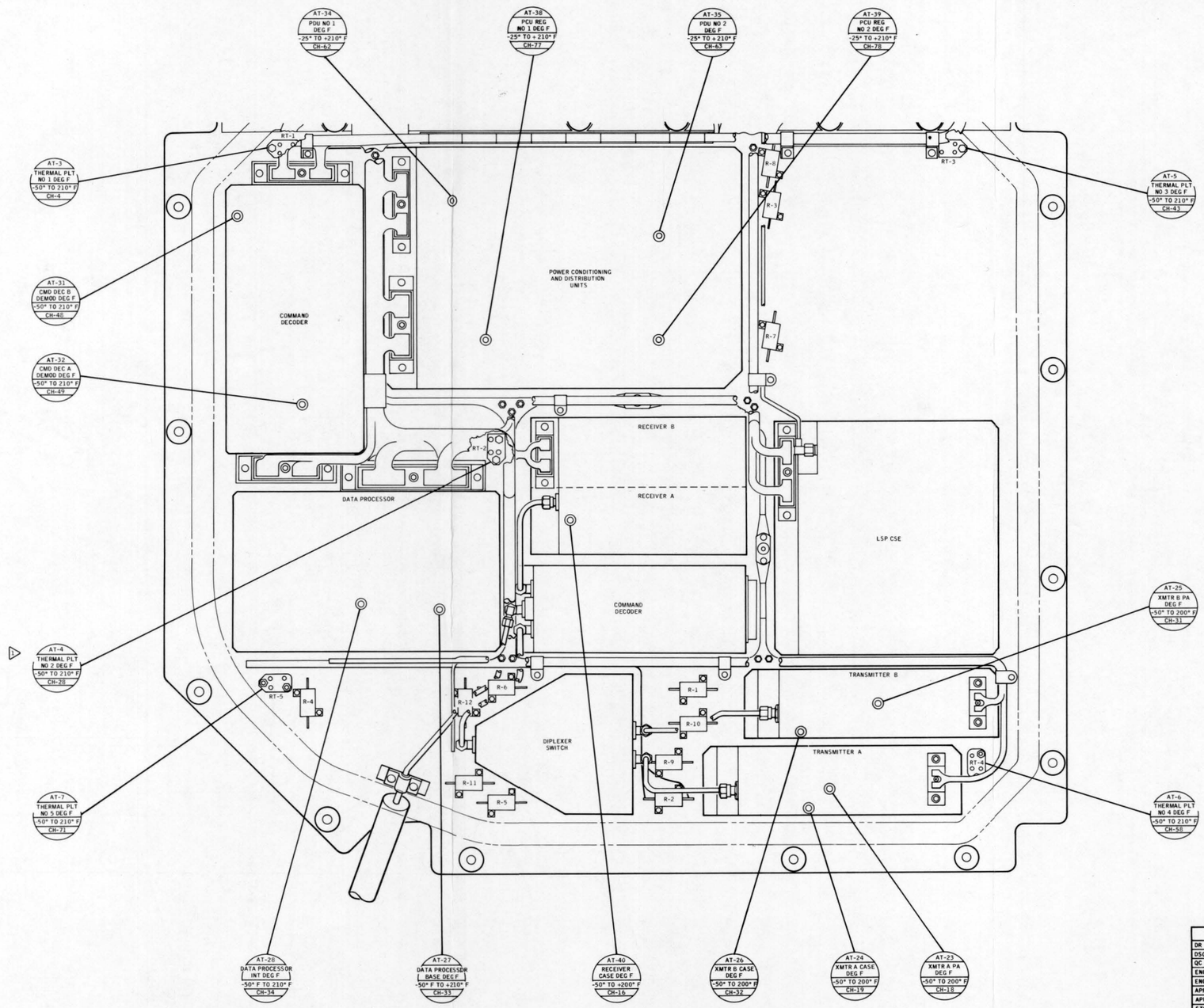

AT-16, C/S THERMAL PLATE NO. 6, IS LOCATED TO THE RIGHT OF AT-4 AND IS ONLY USED IN LSP FORMATTING MODE.

SIGNATURES	DATE
DR	
DSGN	
QC	
ENGR	8-8-72
ENGR	
APP	8-8-72
APP	
STC	8-8-72

NATIONAL AERONAUTICS & SPACE ADMINISTRATION
MANNED SPACECRAFT CENTER · HOUSTON, TEXAS

THERMAL PLATE

ALSEP 5
APOLLO 17

DWG NO 3.2

34 X 44 | PAGE 3-3 | SHEET 1 OF 1

LTR	PCN	DR	ENGR	DATE	APPROVAL

COMMENTS:

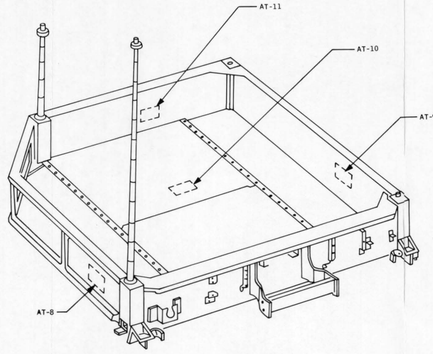

PRIMARY STRUCTURE

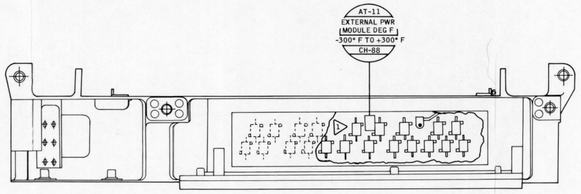

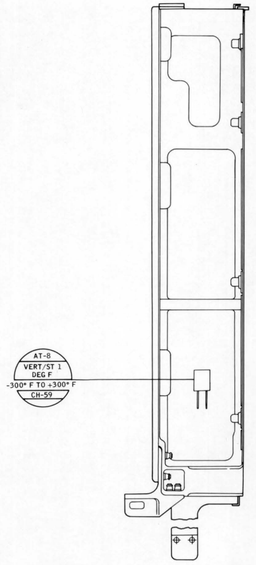

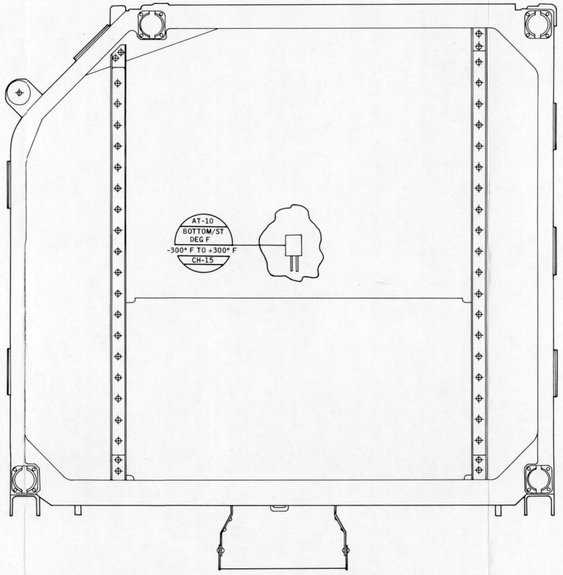

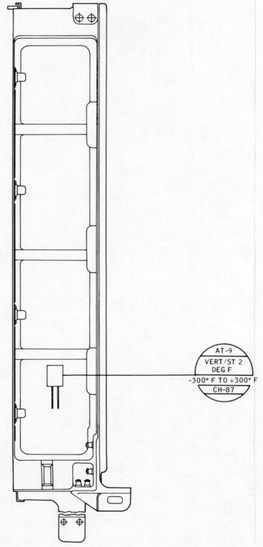

RESISTORS ARE NUMBERED LEFT TO RIGHT:

TOP ROW - R12, R6, R10, R18, R11, R5, R9, R17, R8
BOTTOM ROW - R4, R15, R2, R20, R14, R3, R16, R1, R21, R13, R19, R7

SIGNATURES	DATE
DR	7/13/72
DSGN	
QC	
ENGR	8-8-72
ENGR	
APP	8-8-72
APP	
STC	8-8-72

NATIONAL AERONAUTICS & SPACE ADMINISTRATION
MANNED SPACECRAFT CENTER · HOUSTON, TEXAS

PRIMARY STRUCTURE

ALSEP 5
APOLLO 17

DWG NO 3.3

55.25 X 22 | PAGE 3-4 | SHEET 1 OF 1

LTR	PCN	DR	ENGR	DATE		APPROVAL

COMMENTS:

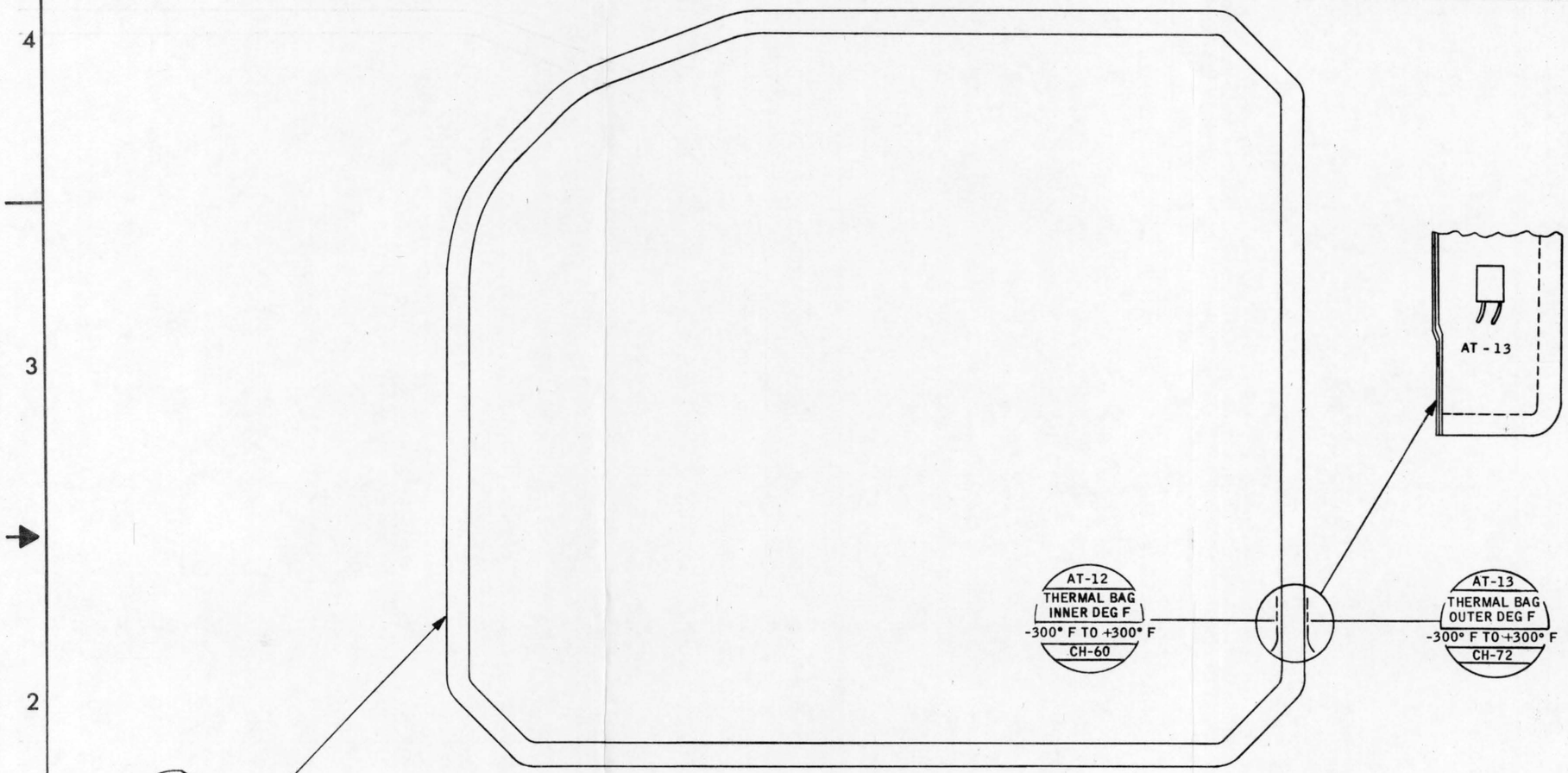

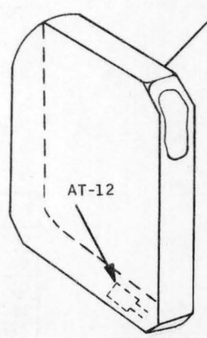

THERMAL BAG

SIGNATURES	DATE
DR	
DSGN	
QC	
ENGR Warren Johnson	8-8-72
ENGR	
APP James E. Laughlin	8-8-72
APP	
STC Bill Cornelius	8-8-72

NATIONAL AERONAUTICS & SPACE ADMINISTRATION
MANNED SPACECRAFT CENTER · HOUSTON, TEXAS

THERMAL BAG

ALSEP 5	DWG NO	3.4
APOLLO 17		
22 X 17	PAGE 3-5	SHEET 1 OF 1

LTR	PCN	DR	ENGR	DATE	APPROVAL
	1				

COMMENTS:

OUTSIDE THERMAL BAG | CENTRAL STATION

POWER DISSIPATION MODULE
365Ω
7 WATT
14 WATT
AT-11 PDM DEG F -300° TO + 300° F
110
APM 1 30 W DUMP
APM 2 30 W DUMP

AB-14 PDM LOAD STATUS DISCRETE CH-80
21K
44K
2K

AT-41 APM NO 1 TEMP DEG F -25° TO + 210° F CH-63
AE-21 APM NO 1 CURRENT 0 TO 2 AMPS DC CH-35
APM CONTROL NO 1
4.90
6.5 WATT HTR

AT-13 THERMAL GAD OUTER DEG F -300° TO + 300° F CH-72
5900

2K
OUTER MULTILAYER INSULATION SENSOR

031 APM 1 OFF
027 APM 1 ON

PCU 1
PCU 2
062 PCU 2 SEL
120 PCU 1 AUTO SEL
POWER OUTPUT MONITOR
121 PCU 2 AUTO SEL
K1
060 PCU 1 SEL
LSP ELECTRONICS

FROM RTG
16V
ASTRO SW NO 1 RESET POWER SW
S1
180°

+ 29V FROM EXP 5 POWER CONTROL RELAY
ASTRO SW NO 2 LSP SAFETY SW
180°

115 APM 2 ON
113 APM 2 OFF
APM CONTROL NO 2
AT-42 APM NO 2 TEMP DEG F -25° TO + 210° F CH-64
AE-22 APM NO 2 CURRENT 0 TO 2 AMPS DC CH-36

022 PDR 2 ON
+ 29VDC
023 PDR 2 OFF
2A
1A
017 PDR 1 ON
021 PDR 1 OFF
RIPPLE-OFF SEQUENCER

PDU NO 1
3010
+ 12VDC
5900
AT-12 THERMAL GAD INNER DEG F -300° TO + 300° F CH-60
2K
INNER MULTILAYER INSULATION SENSOR
PDU NO 2 (SAME AS PDU NO 1)

THERMAL PLATE
15K
AT-1 THERM ILT 1 DEG F -50° TO +210° F CH-7
AT-1 THERM ILT 2 DEG F -50° TO +210° F CH-8
AT-1 THERM ILT 3 DEG F -50° TO +210° F CH-9
AT-1 THERM ILT 4 DEG F -50° TO +210° F CH-10
AT-1 THERM ILT 5 DEG F -50° TO +210° F CH-11

X ANALOG MX/CONV
Y ANALOG MX/CONV

NOTES: ▷ ALL RESISTOR VALUES ARE IN OHMS

OUTSIDE THERMAL BAG | CENTRAL STATION

SIGNATURES	DATE
DR	2-12-73
DSGN R. HUGAR	
QC	
ENGR	2-12-73
ENGR	
APP	2-12-73
APP	
STC	2-12-73

NATIONAL AERONAUTICS & SPACE ADMINISTRATION
MANNED SPACECRAFT CENTER - HOUSTON, TEXAS

CENTRAL STATION SENSORS HEATERS, AND SWITCHES

ALSEP 5
APOLLO 17

DWG NO 3.5

SIZE 8.5 X 14 | PAGE 3-6 | SHEET OF

SECTION 4
ELECTRICAL POWER SUBSYSTEM

4.1 SYSTEM DESCRIPTION

The electrical power subsystem provides the electrical power for lunar surface operation of the ALSEP. Primary electrical power is developed by thermoelectric action with thermal energy supplied by a radioisotope source. The primary power is converted, regulated, and filtered to provide the four operating voltages for the ALSEP experiment and support subsystems.

The components are a radioisotope thermoelectric generator assembly, a fuel capsule assembly, two power conditioning units, and two power distribution units.

4.1.1 Radioisotope Thermoelectric Generator (RTG)

A. RTG commands - No command capability

B. RTG telemetry - Six temperatures (refer to Drawing 4.1), and one output voltage, which is supplied to the operating PCU (refer to Tables 6-VII and 6-VIII)

C. Output - 68 watts, nominal (refer to Figure 4-1)

4.1.2 Power Conditioning Unit (PCU)

The PCU performs five major functions:

A. Voltage conversion

B. Voltage regulation

C. RTG protection

D. Central station temperature protection

E. Ripple-off signal

Each power conditioner consists of a dc-to-dc power converter (inverter and rectifiers), which converts the RTG 16-volt input to the four operating voltages. A shunt current regulator in

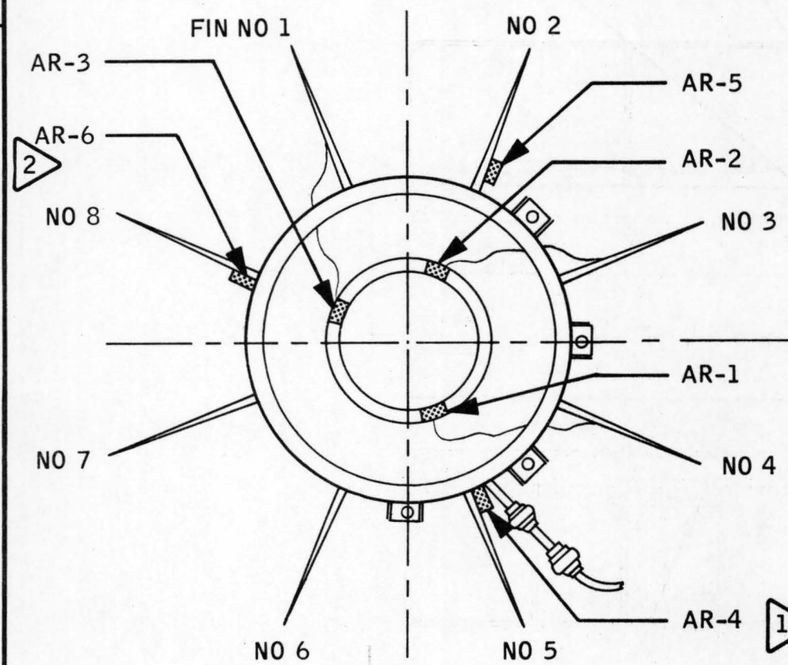

TOP VIEW

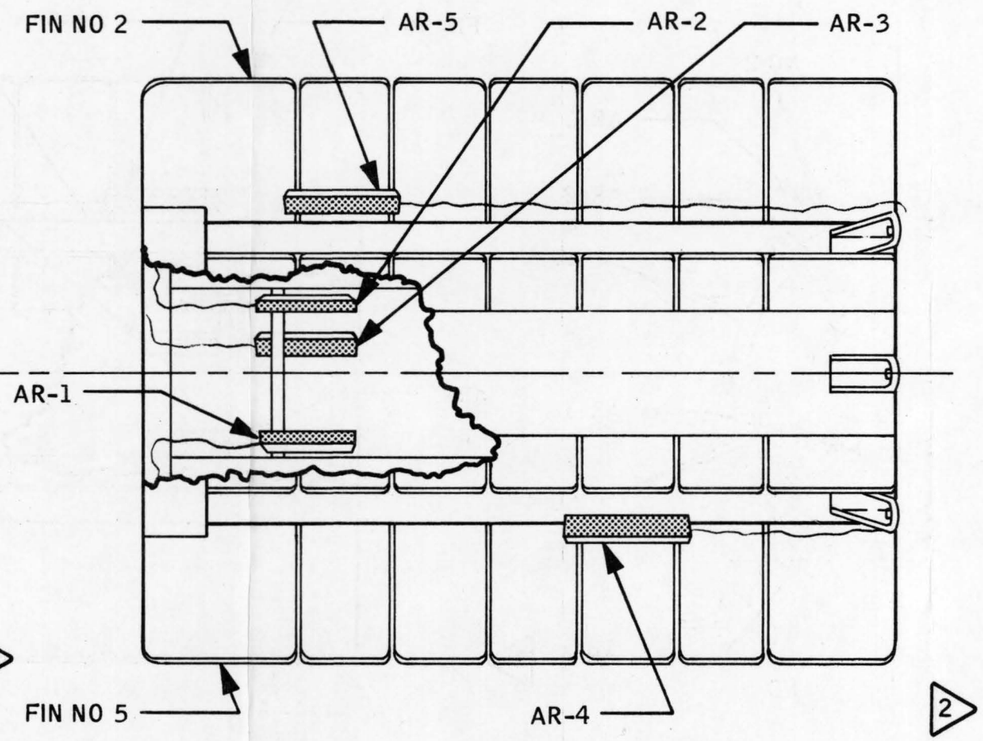

SIDE VIEW

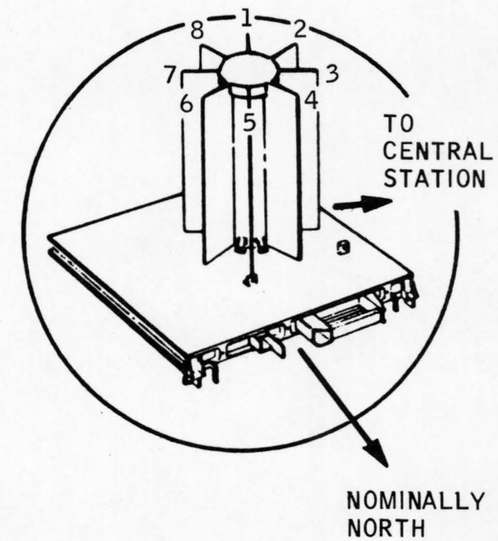

2 AR-6 IS INTERMITTENT

1 AR-4 IS INOPERATIVE

TM
DESIGNATIONS

AR-1 HOT FRAME 1
AR-2 HOT FRAME 2
AR-3 HOT FRAME 3
AR-4 COLD FRAME 1
AR-5 COLD FRAME 2
AR-6 COLD FRAME 3

SIGNATURES	DATE
DR	
DSGN	
QC	
ENGR Warren Johnson	8-8-72
ENGR	
APP James S. Faulkner	8-8-72
STC Bill Cornelius	8-8-72
AUTH	

NATIONAL AERONAUTICS & SPACE ADMINISTRATION
MANNED SPACECRAFT CENTER • HOUSTON, TEXAS

RTG TEMPERATURE
SENSOR LOCATIONS

ALSEP 5
APOLLO 17

DWG NO. 4.1

17 X 11 | PAGE 4-2 | SHEET 1 OF 1

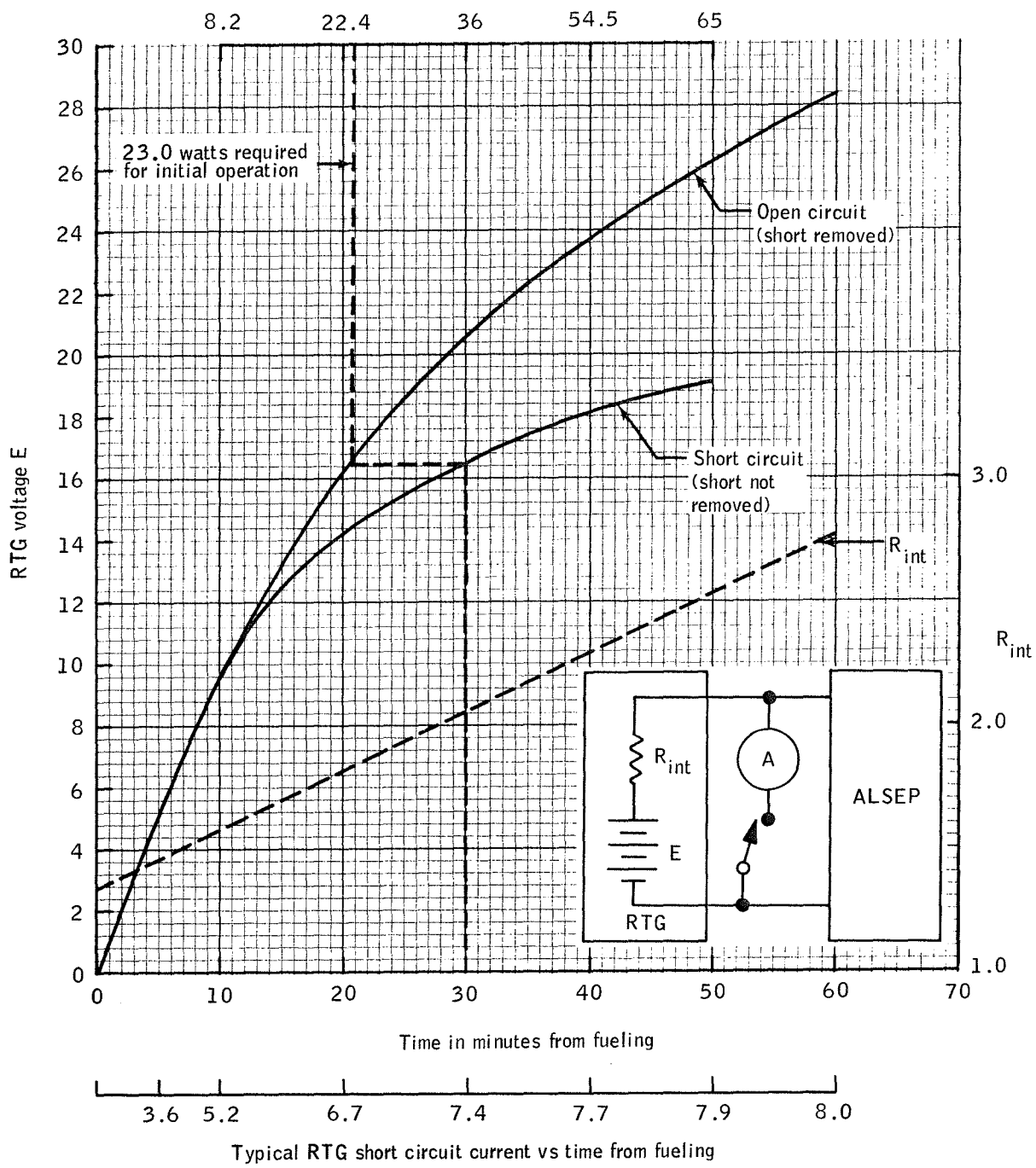

Example:

Short removed 30 minutes after fueling. Move horizontally from short circuit curve to open circuit curve.

Figure 4-1. - RTG warmup characteristics.

conjunction with the APM maintains the input voltage within approximately ±1 percent by maintaining a constant load on the RTG. | P-1

The +16 volts from the RTG is applied through the switching circuit to the selected PCU, applying power to the inverter and completing the shunt regulation circuit. Applying power to the inverter permits it to supply ac power to the rectifiers that develop the dc voltages applied to the filters. The voltage outputs from the filters are the four operating voltages applied to the data subsystem and experiments.

PCU performance is assessed by feedback of the +5, +12, and -12-volt outputs applied to the power output monitor. A +12 volt over or under voltage condition or the loss of +5 or -12-volt signals will cause an automatic switchover to the redundant PCU. The 29-volt output is not monitored by the power output monitor. | P-1

4.1.2.1 Voltage regulator/automatic power management (VR/APM).- The voltage regulator is a shunt type and regulates the PCU output voltage. The voltage regulator's resistive load (3.3 ohms) is inside the central station and it dissipates (65 watts maximum) power to regulate the central station temperature. | P-1

The APM will turn on and dump power into space through a 30-watt dump resistor located in the Power Dissipation Module when all three of the following requirements are met:

A. The APM is commanded ON.
B. There is sufficient power through the voltage regulator to maintain regulation.
C. The temperature of the APM is greater than 80° F.

There is a hysterisis in the temperature control so that once the APM is turned on it will not shut off until the temperature is below 60° F.

The VR/APM also generates the ripple-off logic signal. The ripple-off signal is a logic "1" where there is sufficient reserve power to operate the experiments and logic "0" when an overload occurs and the reserve power falls below 0.8 watts. The ripple-off logic signal is input to the command sequencer. | P-1

If the overload exists for 121 ms, then the ripple-off circuitry in the command sequencer begins to issue PDR OFF and experiment STANDBY commands in 8 ms intervals. The experiments cannot be switched from OFF to STANDBY; if the experiments are OFF, then they remain OFF. | P-1

The ripple-off sequence is as follows:

A. PDR 1
B. PDR 2
C. LMS
D. LEAM
E. HFE
F. LSG
G. LSP

NOTE

The LMS power delta is too small to affect the turn-off sequence; hence, if LMS ripples then the LEAM will also ripple-off (8 ms later).

4.1.3 Power Distribution Unit (PDU)

The PDU distributes power to experiment and central station subsystems and provides circuit overload protection and power switching of selected circuits. | P-1

In the electrical system of ALSEP 5 there is no cross-strapping except at the common input from the RTG. Although only one PCU/PDU combination will be in use at any one time, the setting of relays by ground commands will be tracked in the redundant PCU/PDU. Therefore, the system configuration is maintained in the event of switchover to the redundant PCU/PDU.

4.1.3.1 Temperature sensor circuit.- Operational amplifiers are used to amplify the outputs for the RTG hot and cold junction temperatures. |P-1
The temperature sensors located on the RTG are platinum wire sensors (see Drawing 4.1). Excitation is 12 Vdc on both the hot and cold |P-1
frame temperature circuits.

Nickel wire temperature sensors are used in dividers to monitor exposed structural temperature, multilayer bag insulation temperatures, and sunshield temperatures. The circuit is a simple divider consisting of 12 Vdc supplied through 5900 ohms and the sensor to ground. The output analog signal is taken across the sensor, providing a linear response from -300° to +300° F. (Refer to Section 3 for sensor locations.)

Thermistor sensors are provided to monitor temperatures within the central station and subsystems. The sensor ranges are between -50° and +200° F (See Drawing 3.2).

4.1.3.2 Power control.- (Refer to Drawing 4.2.) Power control is provided by ground commands and/or astronaut switch functions causing the command lines to go to ground potential, thus actuating relay drivers and their associated relays.

A. Experiments

Three transistorized relay drivers, magnetic latching relays, and one magnetic latching relay acting as an overload sensor (circuit breaker) perform the control and circuit protection

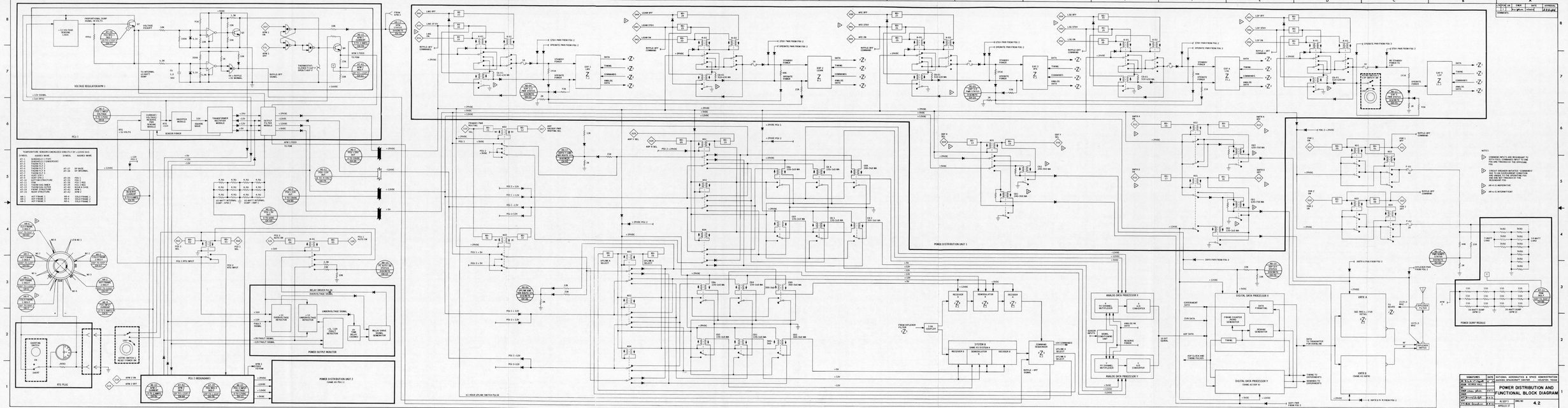
VOLTAGE REGULATOR/AMP 1
PCU 1
PCU 2 (REDUNDANT)
POWER OUTPUT MONITOR
POWER DISTRIBUTION UNIT 2 (SAME AS PDU 1)
POWER DISTRIBUTION UNIT 1
ANALOG DATA PROCESSOR X
ANALOG DATA PROCESSOR Y
DIGITAL DATA PROCESSOR X
DIGITAL DATA PROCESSOR Y
UNITS A
UNITS B
POWER SUMP MODULE
RTG PLUG
TEMPERATURE SENSORS ENERGIZED DIRECTLY BY +12VDC BUS
SYMBOL
ASSIGNED NAME
SYMBOL
ASSIGNED NAME
AT-1
SENSORS 1-7 (TUBE)
AT-2
SENSORS 1-7 (UNDERSIDE)
AT-3
THERMO PL 1
AT-4
THERMO PL 2
AT-5
THERMO PL 3
AT-6
THERMO PL 4
AT-7
THERMO PL 5
AT-8
LEFT SIDE
AT-9
RIGHT SIDE
AT-10
BOTTOM STRUCTURE
AT-11
TOP
AT-12
THERM BKG MBRS
AT-13
FRONT STRUCTURE
AT-14
REAR STRUCTURE
AT-15
AFM 1
AT-16
AFM 2
AT-17
HOT FRAME 1
AT-18
HOT FRAME 2
AT-19
HOT FRAME 3
AT-20
HOT FRAME 4
AT-21
DP BASE
AT-22
DP INTERNAL
AT-23
PDU 1 RIG
AT-24
PDU 2 RIG
AT-25
PDU 1 ELEC
AT-26
PDU 2 ELEC
AT-27
AFM 1
AT-28
AFM 2
AT-29
COLD FRAME 1
AT-30
COLD FRAME 2
AT-31
COLD FRAME 3
AT-32
COLD FRAME 4
NOTES:
1. COMMAND INPUTS ARE REDUNDANT TO PCU-PDU1, COMMANDS INPUT TO PDU2 PDS ARE TRACKED BY THE OPPOSING PDU.
2. CIRCUIT BREAKER INITIATED "COMMANDS" ARE NOT REDUNDANT, THEY ARE ONLY INPUT TO THE OPERATING PDU. THE OPPOSING PDU IS NOT REDUNDANT FOR
AR-A-IL INDEPENDENT
AR-A-IL INTERMITTENT
NATIONAL AERONAUTICS & SPACE ADMINISTRATION
MARSHALL SPACE FLIGHT CENTER, HUNTSVILLE, ALABAMA
POWER DISTRIBUTION AND FUNCTIONAL BLOCK DIAGRAM
4.2
SHEET 1 OF 1

function for each experiment. The experiment standby power line is fused at 1 A. Three command inputs are provided for each experiment power control circuit.

1. Experiment operate select - Experiment ON
2. Experiment standby select - Experiment STBY
3. Experiment off select - Experiment OFF

The three command inputs operate one or both of the two power switching relays. One relay provides selection of either standby or operate power. The other interrupts the standby power line. The experiment ON command provides +29 volts through the current sensing coil of the circuit breaker relay to the experiment electronics. The experiment STANDBY command transfers relay number 1 to the position that removes +29 volts from the operate line and applies +29 volts through the standby power line to the experiment electronics. The experiment OFF command transfers relay number 1 to the experiment STANDBY position and relay number 2 to the position that opens the standby power line to the experiment electronics. An experiment cannot be commanded from OFF to STANDBY without being commanded ON.

Should an overcurrent condition (560 mA circuit breaker) exist through the sensing coil in series with the experiment operate power line, the contacts of the sensing relay break the standby select command line and apply a ground signal to the experiment standby relay driver. This relay driver operates the power selected relay (number 1) to the standby power position. The operation of this relay provides power to the reset coil of the circuit breaker relay thereby resetting its contacts to permit normal experiment command inputs. | P-1

There are redundant circuits in each PDU for experiment power control.

B. Transmitters

Transmitter power control and overload protection uses two power control relays, three circuit breakers, and associated relay drivers. Four commands are required:

1. Transmitter A ON (CMD 012)
2. Transmitter A OFF (CMD 013)
3. Transmitter B ON (CMD 015)
4. Transmitter B OFF (CMD 014)

Transmitters A and B can be independently commanded using the power control relays K1 and K2 to either the ON or OFF configuration. Commanding one transmitter ON does not turn the other one OFF. The XMTR A ON command switches +29-volt power to transmitter A. The XMTR B ON command switches +29 volts to transmitter B as well as +12 volts-power to the diplexer switch. An overcurrent condition powered transmitter causes power to be removed from that transmitter.

It is possible to have both transmitters commanded ON or OFF simultaneously. In the event that both transmitters are switched ON simultaneously, the RF power output of transmitter A is routed to a dummy load. Since there are no heaters in the transmitters in Array E, both transmitters can be switched OFF as a contingency mode for conserving power.

There are redundant circuits in each PDU for Transmitter power control.

C. Digital Data Processors (DDP)

The digital data processor power control is switched by one standard magnetic latching relay. Only the +5 V power is switched from one DDP to the other. Either DDP A (CMD 034) or DDP B (CMD 035) can be selected. Commanding one ON turns the other OFF. An overcurrent (270 mA) by one DDP trips a | P-1

circuit breaker which causes switchover to the redundant unit and this resets the circuit breaker.

There are redundant circuits in each PDU for DDP power control.

D. UPLINK or ADP Relay Module

The power control for the UPLINK switches +12 V, + 5 V, and -12 V-power from one system to the other. Either output A (Receiver A, Decoder A) or output B (Receiver B, Decoder B) can be selected. The power control for the ADP X or ADP Y is identical to that for the UPLINK. Therefore, the UPLINK switching will only be discussed herein. There is only one UPLINK module and one ADP module in the system.

Three power control relays (K1, K2, and K4), two relay drivers, and six circuit breaker circuits provide switching of +12 V, +5 V, and -12 V for the two systems. The selection of one output removes the power from the other.

An overcurrent on any one of the power outputs will cause power to be switched to the other system. The circuit breakers are reset when the system is selected again.

Due to the redundant paths for +12 V and -12 V-power provided within the module, the power is supplied to the selected outputs regardless of which PCU is in operation.

The +5 V supply from each PCU is not bussed as are the +12 V and -12 V supplies (Reference Dwg 4.2). The power control relay for +5 V, K3, is controlled by two relay drivers that are actuated by the following commands:

1. CMD 110 - Primary power routing (W routing)
2. CMD 107 - Backup power routing (X routing)

The selection of the W power routing (CMD 110) supplies +5 V to K1 if PCU 1 is in use or to K4 if PCU 2 is in use. The selection of the X power routing (CMD 107) supplies +5 V to K4 if PCU 1 is in use or to K1 if PCU 2 is in use.

E. Power Dissipation Module (PDM)

In the PDM there are two power dump resistors (PDR's) of 7 watts and 14 watts respectively. The PDR power control uses four power control relays and four relay drivers. There is no overload protection. Four commands are required:

1. PDR 1 ON (CMD 017)
2. PDR 1 OFF (CMD 021)
3. PDR 2 ON (CMD 022)
4. PDR 2 OFF (CMD 023)

Either PDR can be commanded ON or OFF independently of the other. PDR 1 is a 7-watt heater that is controlled by applying +29 volts using relays K1 and K2 operating in series. PDR 2 is a 14-watt heater that is controlled by power control relays K3 and K4 operating in series. When reserve power is critical PDR 1 and PDR 2 are the first two modules to be commanded off by the ripple-off circuitry. There is only one control module for the power dump resistors.

TABLE 4-I.- PCU OVER AND UNDER VOLTAGE

[The over and under voltage circuit samples the +12, -12, and +5 volt outputs of the PCU's and initiates PCU switch-over when the voltages vary outside the following limits.]

BUS	SENSING CIRCUIT	VOLTAGE LEVEL	TIME DELAY
+12 V	Over Voltage	+13.2 ± 0.25 V	5 ms
	Under Voltage	+10.8 ± 0.25 V	300 ± 50 ms
-12 V	Over Voltage	-4.7 V	300 ± 50 ms
+5 V			
	Under Voltage	+0.9 V	300 ± 50 ms

P-1

NOTE

The PCU voltages are sampled as outputs of the Transformers/Rectifiers and before being input to the Output Filters.

TABLE 4-II.- POWER CALCULATIONS

TM symbol	Resultant (Watts)
(AE-3)(AE-4)	= PCU 1 input power
(AE-23)(AE-4)	= PCU 2 input power
(AE-3)(DA-8)	= PCU 1 reserve power
(AE-23)(DA-8)	= PCU 2 reserve power
$(AE-21)^2 \times 8.20$ ohms	= APM 1 dump power
$(AE-22)^2 \times 8.2$ ohms	= APM 2 dump power

TABLE 4-III.- PCU RELAY INITIAL CONDITIONS

[Initial condition is defined as the relay positions at time of activation on the lunar surface]

RELAY	FUNCTION	MONITOR	INITIAL CONDITION
K-01	PCU select	AE-3	PCU 1 selected
K-02	PCU auto switchover	AB-16	PCU 1 auto sw sel
K-01, K-02	PDR 1 select	AB-14	PDR 1 off
K-03, K-04	PDR 2 select	AB-14	PDR 2 off
K-01, K-02, K-04	ADP select	AB-17	ADP X select
K-03	Power routing	AB-17	Primary pwr routing (W routing)
K-01	DDP select	AB-10	DDP X select
K-02	Xmtr A select	AE-17	Xmtr A on
K-01	Xmtr B select	AE-18	Xmtr B off
K-01, K-02	LMS power control	AB-4	LMS off
K-01, K-02	LEAM power control	AB-4	LEAM off
K-01, K-02	HFE power control	AB-5	HFE off
K-01, K-02	LSG power control	AB-5	LSG off
K-01, K-02	LSP power control	AB-11	LSP standby*

*Standby power is not connected to LSP.

TABLE 4-IV.- CIRCUIT BREAKER AND FUSE TABULATION

NUMBER	RATING	CURRENT EXPECTED	TRIP CURRENT	SUBSYSTEM	CIRCUIT	EFFECT
CB-01	510 - 630 mA	560 mA	606 mA	LMS operate	+29 VDC	LMS instrument overload causes CB to place LMS in standby. CB is self-resetting.
CB-01	510 - 630 mA	560 mA	606 mA	LEAM operate	+29 VDC	LEAM instrument overload causes CB to place LEAM in standby. CB is self-resetting.
CB-01	510 - 630 mA	560 mA	606 mA	HFE operate	+29 VDC	HFE instrument overload causes CB to place HFE in standby. CB is self-resetting.
CB-01	510 - 630 mA	560 mA	606 mA	LSG operate	+29 VDC	LSG instrument overload causes CB to place LSG in standby. CB is self-resetting.
CB-01	510 - 630 mA	560 mA	606 mA	LSP operate	+29 VDC	LSP instrument overload causes CB to place LSP in standby. CB is self-resetting.
CB-04	300 - 360 mA	58 mA	350 mA	Receiver A, Command Decoder A	+12 VDC	Receiver A or Command Decoder A overload causes CB to switch power to Uplink B. CB is reset when Uplink A is selected. P-1
CB-01	300 - 360 mA	58 mA	350 mA	Receiver B, Command Decoder B	+12 VDC	Receiver B or Command Decoder B overload causes CB to switch power to Uplink A. CB is reset when Uplink B is selected.
CB-05	300 - 360 mA	78 mA	350 mA	Command Decoder A	+5 VDC	Command Decoder A overload causes CB to switch power to Uplink B. CB is reset when Uplink A is selected.
CB-06	135 - 165 mA	4 mA	150 mA	Command Decoder A	-12 VDC	Command Decoder A overload causes CB to switch power to Uplink B. CB is reset when Uplink A is selected.
CB-02	300 - 360 mA	78 mA	350 mA	Command Decoder B	+5 VDC	Command Decoder B overload causes CB to switch power to Uplink A. CB is reset when Uplink B is selected.
CB-03	135 - 165 mA	4 mA	150 mA	Command Decoder B	-12 VDC	Command Decoder B overload causes CB to switch power to Uplink A. CB is reset when Uplink B is selected.
CB-02	240 - 300 mA	150 mA	270 mA	Digital Data Processor X	+5 VDC	DDP X overload causes CB to switch power to DDP Y. CB is self-resetting.
CB-01	240 - 300 mA	150 mA	270 mA	Digital Data Processor Y	+5 VDC	DDP Y overload causes CB to switch power to DDP X. CB is self-resetting.
CB-01	135 - 165 mA	13 mA	150 mA	ADP Y	+12 VDC	ADP Y overload causes CB to switch power to ADP X. CB is reset when ADP Y is selected.
CB-02	300 - 360 mA	65 mA	350 mA	ADP Y	+5 VDC	ADP Y overload causes CB to switch power to ADP X. CB is reset when ADP Y is selected.
CB-03	135 - 165 mA	33 mA	150 mA	ADP Y	-12 VDC	ADP Y overload causes CB to switch power to ADP X. CB is reset when ADP Y is selected.
CB-04	135 - 165 mA	13 mA	150 mA	ADP X	+12 VDC	ADP X overload causes CB to switch power to ADP Y. CB is reset when ADP X is selected.
CB-05	300 - 360 mA	65 mA	350 mA	ADP X	+5 VDC	ADP X overload causes CB to switch power to ADP Y. CB is reset when ADP X is selected.
CB-06	135 - 165 mA	33 mA	150 mA	ADP X	-12 VDC	ADP X overload causes CB to switch power to ADP Y. CB is reset when ADP X is selected.
CB-01	630 - 750 mA	300 mA	760 mA	Transmitter B	+29 VDC	Transmitter B overload causes CB to remove power from Transmitter B. CB is self-resetting.
CB-02	135 - 165 mA	10 mA	150 mA	Transmitter B (Diplexer SW)	+12 VDC	Diplexer overload causes CB to remove power from Transmitter B. CB is self-resetting.
CB-03	630 - 750 mA	300 mA	760 mA	Transmitter A	+29 VDC	Transmitter A overload causes CB to remove power from Transmitter A. CB is self-resetting.
F-01	1 A	545 mA	1 A	LMS Standby	+29 VDC	A blown F-01 will permanently disable the LMS STBY capability.
F-01	1 A	545 mA	1 A	LEAM Standby	+29 VDC	A blown F-01 will permanently disable the LEAM STBY capability.
F-01	1 A	545 mA	1 A	HFE Standby	+29 VDC	A blown F-01 will permanently disable the HFE STBY capability.
F-01	1 A	545 mA	1 A	LSG Standby	+29 VDC	A blown F-01 will permanently disable the LSG STBY capability.
F-01	1 A	321 mA	1 A	PDR 1	+29 VDC	A blown F-01 will disconnect the 7-watt dump resistor. P-1
F-02	2 A	641 mA	2 A	PDR 2	+29 VDC	A blown F-02 will disconnect the 14-watt dump resistor.

TABLE 4-V.- VOLTAGE DISTRIBUTION AND BUS LOAD ANALYSIS

VOLTAGE BUS	CIRCUIT	WATTS	PROTECTION	
+29 VDC	LMS ON	11.0	CB-01, 510 - 630 mA	
	LMS STBY	7.5	F-01, 1 AMP	
	LEAM ON	6.6	CB-01, 510 - 630 mA	
	LEAM STBY	5.0	F-01, 1 AMP	
	HFE ON	10.7	CB-01, 510 - 630 mA	
	HFE STBY	4.2	F-01, 1 AMP	
	LSG ON	8.75	CB-01, 510 - 630 mA	
	LSG STBY	4.3	F-01, 1 AMP	
	LSP ON	6.97	CB-01, 510 - 630 mA	
	XMTR A	8.90	CB-03, 630 - 750 mA	
	XMTR B	8.74	CB-01, 630 - 750 mA	
	PDR 1	7.0	F-01, 1 AMP	P-1
	PDR 2	14.0	F-02, 2 AMP	
	PCU	SEE GRAPH		
	PDU	VARIABLE		
+12 VDC	CMD DEC A OR B	0.05	CB-01 and CB-04, 300 - 360 mA	P-1
	DIPLEXER SW	0.10	CB-02, 135 - 165 mA	
	ADP X OR Y	0.73	CB-01 and CB-04, 135 - 165 mA	
	PCU	SEE GRAPH		
	RECEIVER A	0.72	CB-04, 300 - 360 mA	P-1
	RECEIVER B	0.76	CB-01, 300 - 360 mA	
	TEMP SENSORS	NEGLIGIBLE	NONE	
+5 VDC	CMD DEC A OR B	0.56	CB-02 and CB-05, 300 - 360 mA	
	ADP X OR Y	0.23	CB-02 and CB-05, 300 - 360 mA	
	DDP X OR Y	0.57	CB-01 and CB-02 240 - 300 mA	
	PCU	SEE GRAPH		
	PDU	0.08		
	RELAY DRIVERS	NEGLIGIBLE	NONE	
-12 VDC	CMD DEC A OR B	0.06	CB-03 and CB-06, 135 - 165 mA	
	ADP X OR Y	0.42	CB-03 and CB-06, 135 - 165 mA	
	PCU	SEE GRAPH		

TABLE 4-VI.- COMMANDS CAUSING DELTA POWER DEMANDS

Tabulation of ΔP caused by command execution assuming the following conditions exist:

Transmitter A	OFF
Transmitter B	OFF
PDR 1	OFF
PDR 2	OFF
LMS	OFF
LEAM	OFF
HFE	OFF
LSG	OFF
LSP	OFF
APM	OFF

The ALSEP subsystems will demand electrical power from the PCU in the following amounts:

	POWER (WATTS)	
	DAY	NIGHT
Receiver A or B	0.90	0.90
Cmd Dec A or B	0.65	0.65
ADP X or Y	0.86	0.86
DDP X or Y	1.36	1.36
PDU	1.75	2.50
Harness Losses	0.30	0.35
PCU Losses	5.73	7.54
Total	11.55	14.16

TABLE 4-VI.- COMMANDS CAUSING DELTA POWER DEMANDS - Concluded

The 14.16 watts represents the minimum loading on the PCU. Add the delta power of any of the following commands to obtain total loading. PCU conversion losses increase with loading.

COMMAND		DELTA POWER (WATTS) DAY	NIGHT
012	XMTR A ON	9.00	9.00
015	XMTR B ON	9.10	9.10
017	PDR 1 ON	7.00	7.00
022	PDR 2 ON	14.00	14.00
036	LMS ON	10.01	11.00[1]
037	LMS STBY	7.50	7.50
042	LEAM ON	3.16	6.60
043	LEAM STBY	5.00	5.00
045	HFE ON	3.90	10.70
046	HFE STBY	4.20	4.20
052	LSG ON	2.75[2]	8.75[2]
053	LSG STBY	4.30	4.30
055	LSP ON	5.30	5.30

1. Includes 1.5 watt backup heater.

2. LSG proportional heater accounts for Δ of 6 watts day to night.

TABLE 4-VII.- CENTRAL STATION STEADY STATE POWER DEMANDS ON EACH VOLTAGE BUS FROM THE PCU

SUBSYSTEM	+29 VDC	+12 VDC	-12 VDC	+5 VDC	TOTAL	NOTES
Xmtr A	8.90 W				8.90 W	CMD 012 turns Xmtr A ON. Xmtr A protection: +29 VDC, CB-03
Xmtr B	8.74 W				8.74 W	CMD 015 turns Xmtr B ON and supplies power to Diplexer. Xmtr B protection: +29 VDC, CB-01. Diplexer protection: +12 VDC, CB-02.
Diplexer		0.10 W			0.10 W	CMD 013 turns Xmtr A OFF. CMD 014 turns Xmtr B OFF and Diplexer OFF.
Receiver A		0.72 W			0.72 W	UPLINK A and UPLINK B each require a maximum of 1.43 W and are alternately selected by CMD 122 UPLINK SWITCHOVER. UPLINK A protection: +12 V, CB-04; +5 V, CB-05; -12 V, CB-06. UPLINK B protection: +12 V, CB-01; +5 V, CB-02; -12 V, CB-03.
Receiver B		0.76 W			0.76 W	
Command Decoder A		0.04 W	0.04 W	0.56 W	0.64 W	
Command Decoder B		0.05 W	0.06 W	0.56 W	0.67 W	
ADP X		0.73 W	0.40 W	0.23 W	1.36 W	CMD 024 selects ADP X. ADP X protection: +12 V, CB-04; +5 V, CB-05; -12 V, CB-06. CMD 025 selects ADP Y. ADP Y protection: +12 V, CB-01; +5 V, CB-02; -12 V, CB-03.
ADP Y		0.73 W	0.42 W	0.22 W	1.37 W	
DDP X				0.56 W	0.56 W	CMD 034 selects DDP X. DDP X protection: +5 VDC, CB-02.
DDP Y				0.57 W	0.57 W	CMD 035 selects DDP Y. DDP Y protection: +5 VDC, CB-01.
PDU 1 OR 2	VARIABLE			0.08 W	VARIABLE	PDU controls the distribution of power to the ALSEP subsystems.
PCU 1 OR 2	← SEE GRAPH →					CMD 060 turns PCU 1 ON, PCU 2 OFF. CMD 062 turns PCU 2 ON, PCU 1 OFF.
PDR 1	7.0 W				7.0 W	CMD 017 turns PDR 1 ON; CMD 021 turns PDR 1 OFF. PDR 1 protection: +29 V, F-01. CMD 022 turns PDR 2 ON; CMD 023 turns PDR 2 OFF. PDR 2 protection: +29 V, F-02.
PDR 2	14.0 W				14.0 W	

TABLE 4-VIII.- RELAY DRIVER FUNCTIONS AND INPUT VOLTAGE REQUIREMENTS

RELAY DRIVERS	RELAY	FUNCTION	MONITOR	CMD	RELAY DRIVER TYPE*		
					1	2	3
R-01	K-01	PCU 1 SEL	AE-3	060			X
R-02	K-01	PCU 2 SEL	AE-23	062			X
R-03	K-02	PCU 1 AUTO SW	AB-16	120		X	
R-04	K-02	PCU 2 AUTO SW	AB-16	121		X	
R-05	K-01, K-02	PDR 1 ON	AB-14	017	X		
R-06	K-01, K-02	PDR 1 OFF	AB-14	021	X		
R-07	K-03, K-04	PDR 2 ON	AB-14	022	X		
R-08	K-03, K-04	PDR 2 OFF	AB-14	023	X		
R-09	K-01, K-02, K-04	ADP X SEL	AB-17	024	X		
R-10	K-01, K-02, K-04	ADP Y SEL	AB-17	025	X		
R-11	K-03	PRIM PWR ROUT	AB-17	110	X		
R-12	K-03	BKUP PWR ROUT	AB-17	107	X		
R-13	K-01	DDP X SEL	AB-10	034	X		
R-14	K-01	DDP Y SEL	AB-10	035	X		
R-15	K-02	XMTR A ON	AE-17	012	X		
R-16	K-02	XMTR A OFF	AE-17	013	X		
R-17	K-01	XMTR B ON	AE-18	015	X		
R-18	K-01	XMTR B OFF	AE-18	014	X		
R-19	K-01, K-02	LMS ON	AB-04	036	X		
R-20	K-01	LMS STBY	AB-04	037	X		
R-21	K-01, K-02	LMS OFF	AB-04	041	X		
R-22	K-01, K-02	LEAM ON	AB-04	042	X		
R-23	K-01	LEAM STBY	AB-04	043	X		
R-24	K-01, K-02	LEAM OFF	AB-04	044	X		
R-25	K-01, K-02	HFE ON	AB-05	045	X		
R-26	K-01	HFE STBY	AB-05	046	X		
R-27	K-01, K-02	HFE OFF	AB-05	050	X		
R-28	K-01, K-02	LSG ON	AB-05	052	X		
R-29	K-01	LSG STBY	AB-05	053	X		
R-30	K-01, K-02	LSG OFF	AB-05	054	X		
R-31	K-01, K-02	LSP ON	AB-11	055	X		
R-32	K-01	LSP STBY	AB-11	056	X		
R-33	K-01, K-02	LSP OFF	AB-11	057	X		
R-34	K-01, K-02, K-04	UPLINK A	AB-06	122	X		
R-35	K-01, K-02, K-04	UPLINK B	AB-06	122	X		
R-36	K-3	UPLINK PRIM PWR ROUT	AB-06	110	X		
R-37	K-03	UPLINK BKUP PWR ROUT	AB-06	TIMER	X		

*REFER TO FIGURE 4-5 FOR SCHEMATIC OF RELAY DRIVERS

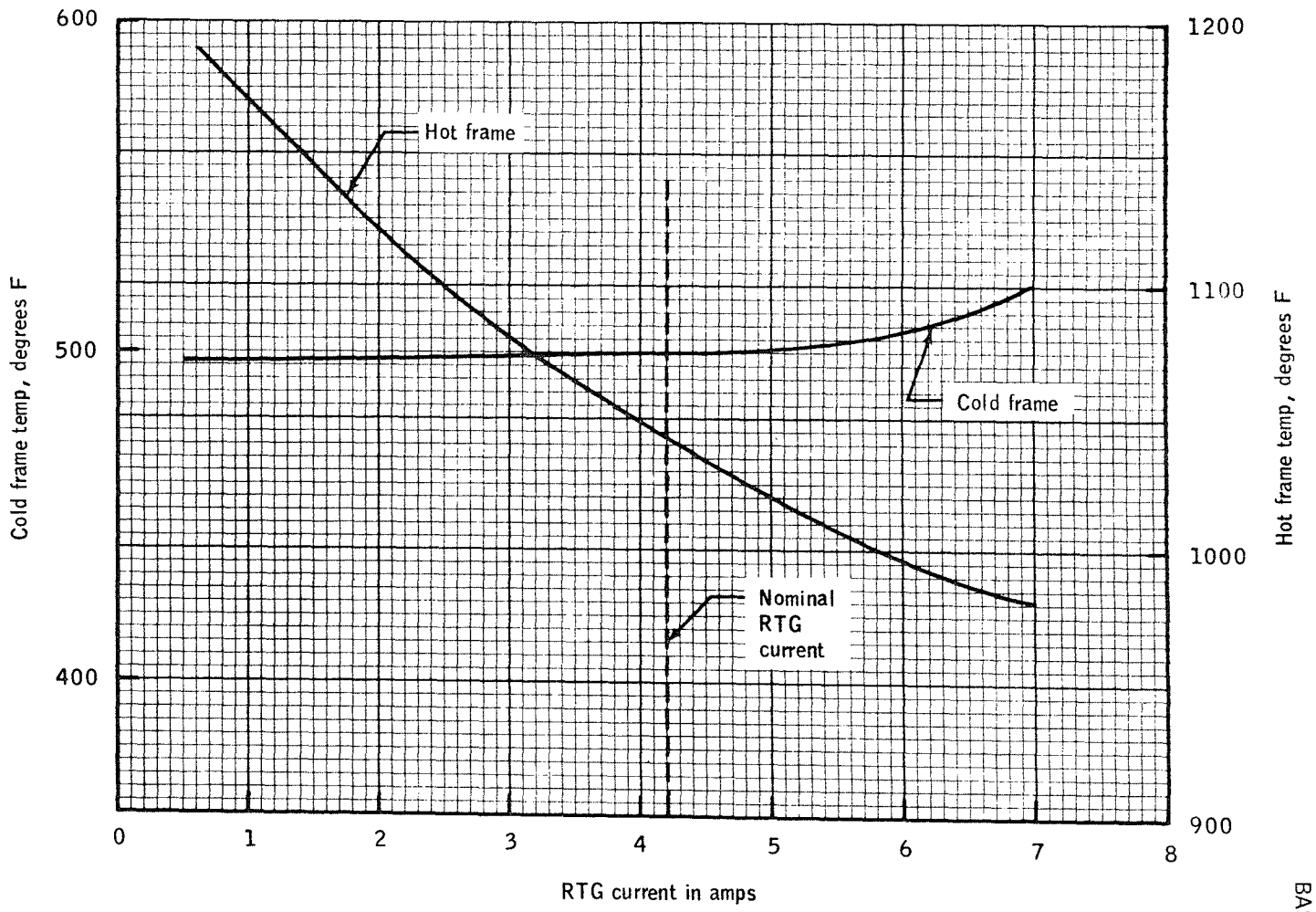

Figure 4-2.- RTG hot and cold frame temps versus RTG current (typical).

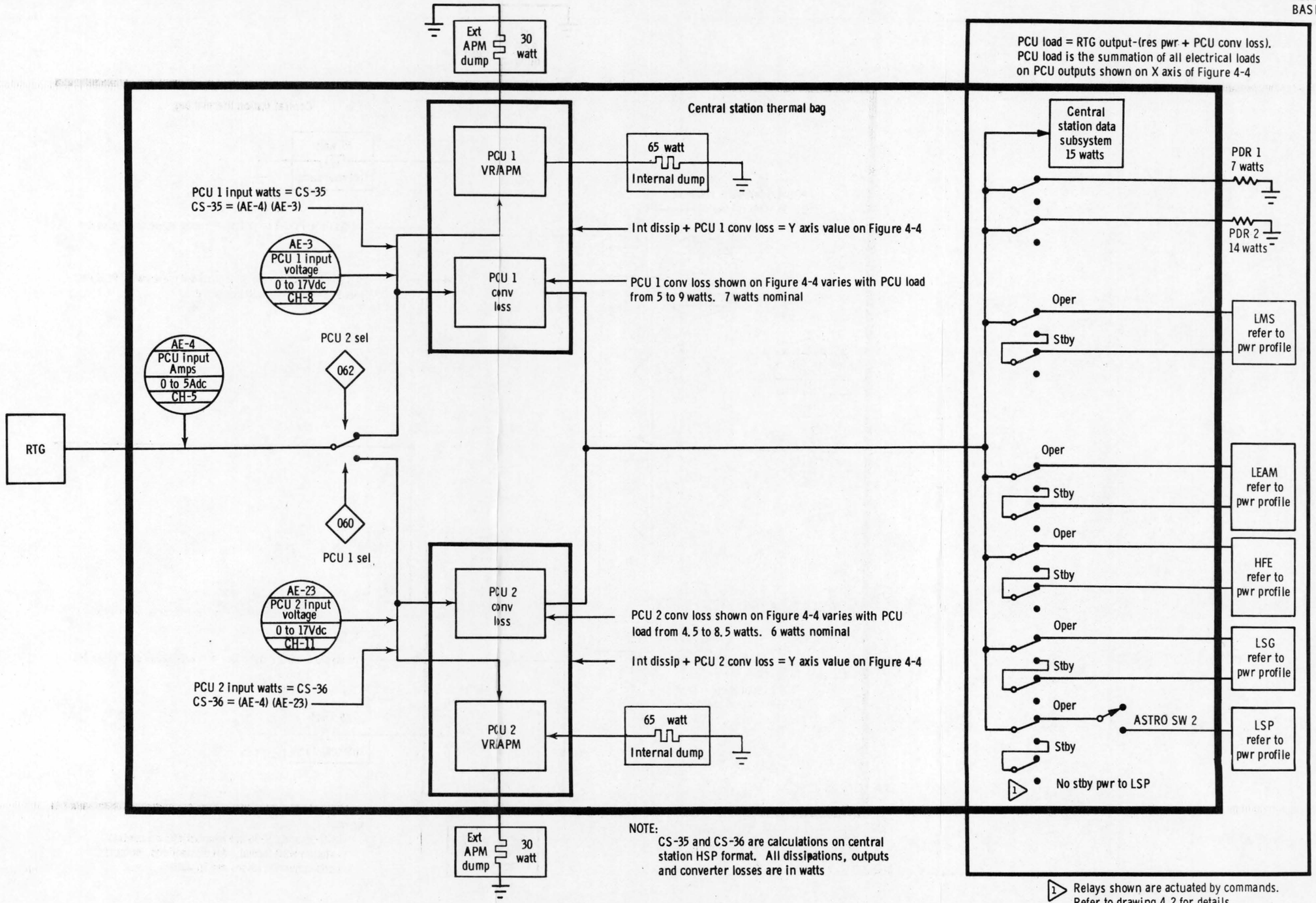

Figure 4-3. - ALSEP 5 Power Distribution.

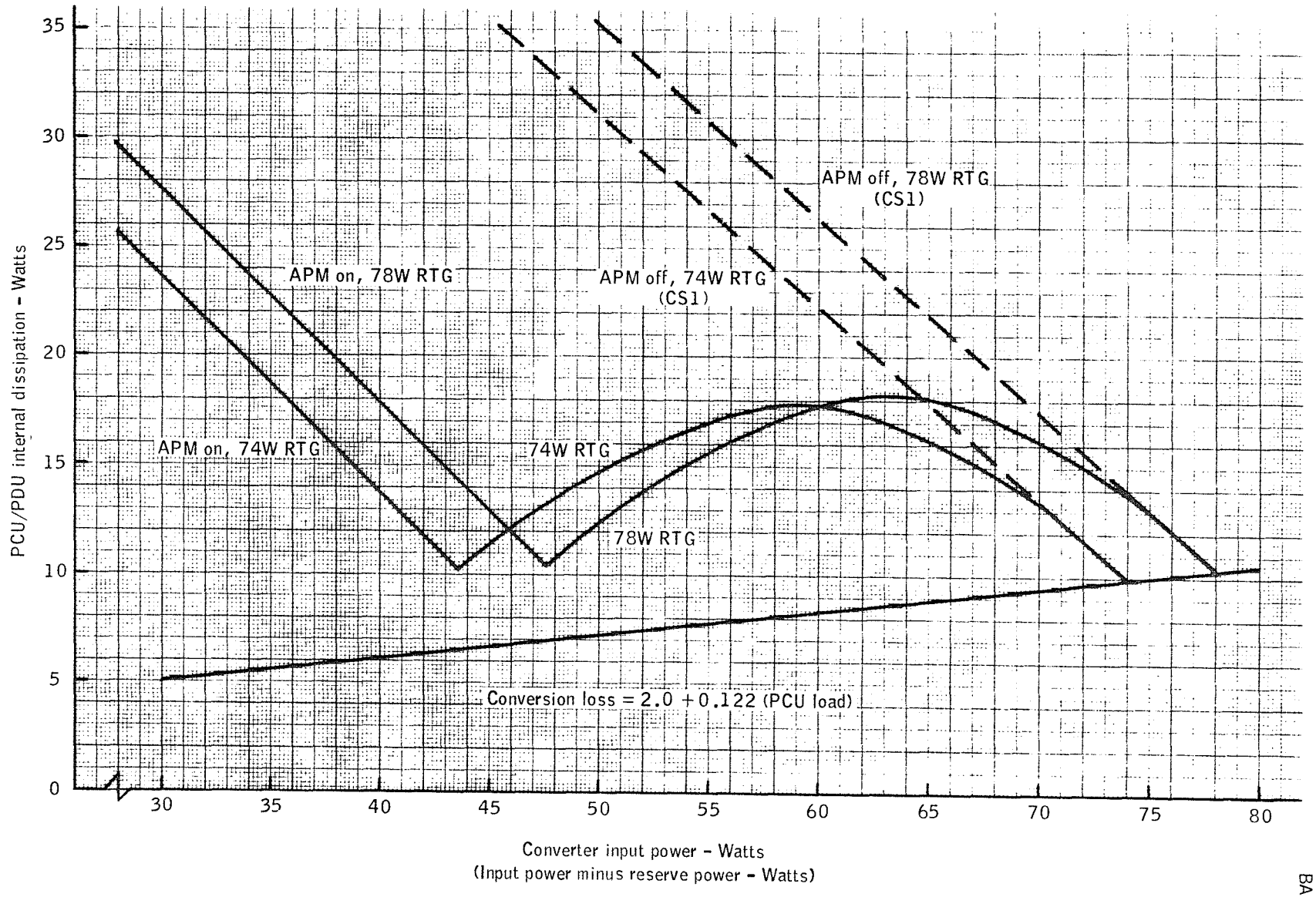

Figure 4-4.- Power dissipation in central station.

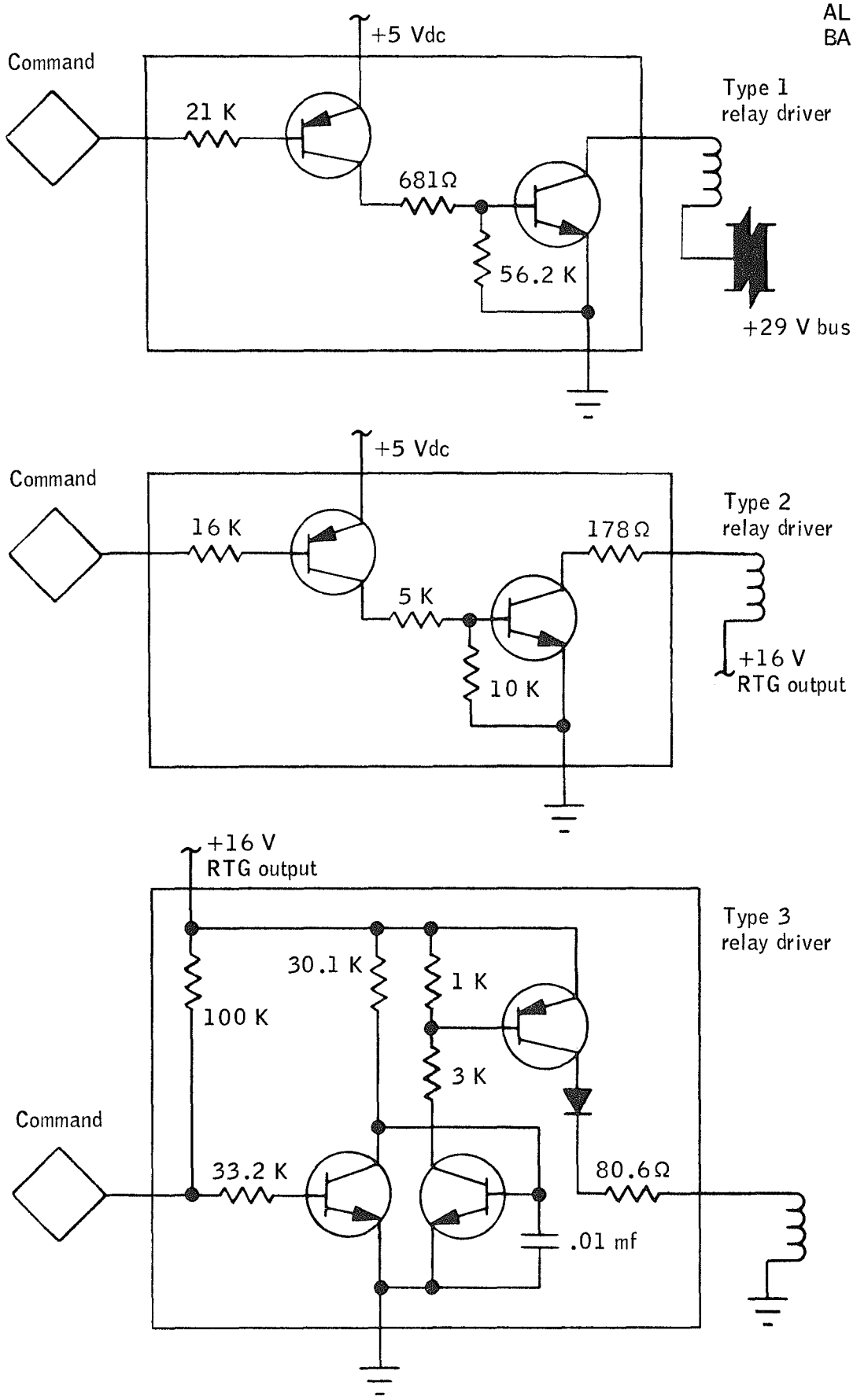

Figure 4-5.- Relay drivers.

SECTION 5
COMMAND SUBSYSTEM

5.1 SYSTEM DESCRIPTION

The ALSEP command subsystem receives, decodes, and supplies commands to applicable users to control prescribed operations.

The delayed-command sequencer will generate fixed commands, at predetermined times under the control of the central station sequencer, to insure that command systems switch-over and calibration functions are implemented in the event of an uplink failure.

The following units make up the ALSEP command subsystem:

A. S-band antenna
B. Diplexer filter
C. Power splitter
D. Command receivers A and B
E. Command decoders A and B

5.1.1 S-Band Antenna

The ALSEP antenna is a modified axial helix designed to receive and transmit right-hand circular polarized signals at the Apollo S-band frequency.

The antenna has no command requirements, TM measurements, or power requirements. Antenna operating parameters are presented in the following table:

Mode	Antenna gain	Frequency	Beamwidth	Polarization
Transmit	15.2 dB	S-band	27°	Right-hand
Receive	14.7 dB	S-band	27°	Right-hand

5.1.2 Diplexer Filter

The diplexer filter is used to couple the received RF from the antenna to the power splitter and to couple the transmitted RF from the transmitter, A or B, through the diplexer switch to the antenna.

The diplexer filter has no command requirements, TM measurements, or power requirements.

5.1.3 Power Splitter

The power splitter is a 3db coupler that routes the received RF to receivers A and B. Only one receiver is enabled at any one time and the output of the other receiver is inhibited.

5.1.4 Command Receiver

Redundancy control is fully implemented within the receiver. Redundancy control considers the effect of the command link being off for periods of time as long as 122 hours. | P-1

No reliability degradation to the receiver occurs as a result of the command link being off for long periods of time. | P-1

Each individual receiver is capable of PM carrier detection (Formats 1 & 2) and detection of an FM subcarrier (Format 2 only). An appropriate output amplifier provides a composite audio output voltage to interface with the ALSEP command decoder.

The receiver modulation format is selected by a jumper wire at the component connector upon installation of the receiver in ALSEP.

The interfacing ALSEP diplexer provides 80 db rejection at the L. O. Frequency and 100 db rejection at the image frequency (for a 60 MHz XF). The 3 db bandwidth of the diplexer receiver channel is 24 MHz maximum.

5.1.4.1 Input Modulation.- The receiver is compatible with the following command signal formats. One thousand b/s NRZ command data is bi-phase modulated on a 2 kHz sine wave data tone.

A 1 kHz sync tone is linearily added to the 2 kHz data tone. The sync tone power is equal to the data tone power and the two tones are in phase at the zero voltage cro-sing. This is the transmitted composite autio signal.

A. Format 1 - The composite audio signal phase modulates the 2119 MHz carrier at $\beta_1 = \pm 3.00$ radians peak. The tolerance on β_1 is +10 percent and -0 percent. (Selected by hand-wired switch.) | P-1

B. Format 2 - The composite audio signal frequency modulates a 70 kHz auxiliary subcarrier at ±7.5 kHz peak deviation. The tolerance on subcarrier deviation is ±10 percent. The 70 kHz signal then phase modulates a 2119 MHz carrier at β_2 = ±1.85 Radians peak ±10 percent. (Locked out by handwired switch.) | P-1

5.1.4.2 Demodulation.- The receiver demodulates Format 1 or Format 2 to provide a composite audio output of the 2 kHz sinewave data tone and the 1 kHz sync tone. The receiver does not respond to Format 1 if Format 2 is selected and vice-versa.

5.1.4.3 Receiver characteristics are as follows:

Input Frequency	2119 MHz ±0.001 percent	
Dynamic Range	-100 to -60 dbm	
Power Requirements	0.9 watts	P-1
Input Impedance	50 ohms at center frequency	
Output Voltage	5 volts ±20 percent P-P	
IF Frequency	60 MHz	
TM Parameters	5	P-1

5.1.5 Command Decoder

The command decoder consists of a redundant demodulator section, a redundant digital decoder section, and a non-redundant command sequencer.

A. The command decoder contains two identical channels, each of which forms a link in the redundant uplink chains. When one uplink channel is in operation, the other is unpowered in standby. Each channel performs the following functions:

1. Provides an output command on the appropriate line in accordance with command information from the associated command receiver.

2. Stores and delivers on demand a command verification message, consisting of the command and a bit which indicates whether or not parity is checked.

3. Processes a sequencer which causes periodic uplink switchover. Processing circuitry within the command decoder is independent of that used for automatic switchover, insofar as is possible. Each channel also processes the command which delays automatic switchover. |P-1

B. The non-redundant sequencer output of the command decoder performs the following functions:

1. Automatically generates a repeated sequence of commands to recalibrate experiment data sensors on a periodic basis.

2. Automatically generates a command which will cause a switchover of uplink chains, if "DELAY UPLINK SWITCHOVER" has not been processed since the last automatic switchover command was generated.

3. Provides power dump and experiment ripple-off commands.

C. Command decoder power requirements are presented in the following table:

Voltage Bus	Watts Nominal	mAdc	Comments
+12 Vdc ±5%	0.050	4.2	Redundant circuits
+12 Vdc ±10%	0.005	0.4	Non-redundant circuits
-12 Vdc ±10%	0.100	8.3	Redundant and non-redundant circuits
+5 ±10%	0.950	190	Redundant and non-redundant circuits

5.1.5.1 Demodulator section.- The demodulator section accepts the composite audio subcarrier from its command receiver. The composite audio subcarrier is the linear sum of the data and sync subcarriers, where the 2-kHz data subcarrier is modulated by a 1000 bit-per-second data stream and the sync signal is a 1-kHz subcarrier.

The 1-kHz subcarrier is used to phase-lock a voltage controlled oscillator (VCO) in order to assure command bit synchronization during the decoding process. The detection and extraction of the command bits is accomplished by comparing the 2-kHz subcarrier with a 2-kHz synchronized signal produced by the VCO, which is phase-locked by the 1-kHz subcarrier signal.

5.1.5.2 Digital decoder section.-

A. Redundant digital decoder

A redundant digital decoder section is provided. The digital decoders are identical and have identical decoder addresses. A command can be executed by either decoder by powering the desired command system. The decoder addresses for ALSEP 5 are the following:

1. ALSEP 5 system A 1101001 (octal 151)
2. ALSEP 5 system B 1101001 (octal 151)

The system is unique in that it does not use sub-bit encoding.

The ALSEP command structure consists of 21 bits:

1101001	1000100	0111011
7 bits	7 bits	MSB 7 bits LSB
Decoder address	Command complement	Command

A bit-by-bit comparison is made between the command complement and the command for error protection. A minimum of 20 bits must precede the command to insure phase lock, and a minimum of 20 bits follow the command to allow for command execution.

Upon receipt of a command, a command verification word is inserted in Word 7 of the TM downlink. The command verification word consists of ten bits. Seven bits in the downlink word are the command received and one bit, called the parity bit, indicates that the command and command complement did or did not compare.

DA-7	DA-5	DA-6	
XX	0111011	1	P-1
MSB	7 bits	LSB	
2 bits	Command received	1 bit	
Filler bits		Parity	

Parity Bit "1": Command and command complement compared, and command was executed.

Parity Bit "0": Command and command complement did not compare, and command was not executed.

B. Normal Decoder Operation

The control logic consists of an 8-bit shift register, two counters, and reset circuitry. The shift register has the demodulated split-phase data stream from the ground station passing through it at the uplink data rate of 1 kHz. A gate constantly samples the first seven bits of the shift register for the address of the ALSEP.

Once the address is recognized, a timing sequence is initiated. The first counter produces one pulse output for every seven clock pulses input (divide by 7). This output then clocks a binary counter which acts as master control for the timing. After address recognition, the next seven pulses shift the command complement into the last seven bits of the shift register. P-1

The binary counter, now in the state 001, ensures that the next seven bits of data (the command) clocked in are checked for parity.

An "exclusive or" gate sensing the first and last bits of the shift register performs a parity check on each bit of the command complement and the corresponding bit of the command. Bad parity will set the parity memory.

The next three states of the binary counter (21 mS) define the command execute sequence by setting a latch and also inhibit the clock pulses to the shift register by means of another latch. At this time, the command will be present in the last seven bits of the shift register.

The command sequence pulse is gated with the parity memory to produce a command execute pulse, causing the command line corresponding to the command code in the shift register to be energized. This will only occur if the parity check was good.

P-1

After the command has been executed, a logic signal is sent to the data processor by a timing latch, causing a data demand signal to be sent back to the command decoder during the interval of the next Command Verification Word (CVW) in the downlink frame. A dual flip-flop gates out the first two downlink shift pulses generated in the data processor, inserting two filler bits, and allows the next eight to shift the contents of the shift register to the data processor. The eight bit shifted out is set to a 1 for good parity, and to 0 for bad parity. Of the 10 bits in the CVW recieved by the ground station, the first two are filler bits and identical to the most significant bit of the command word, which occupies bits 3 to 9. The tenth bit is the parity check bit, with a 1 indicating good parity and that the command was executed.

A master reset is completed at the end of the data demand pulse by using the phase relation between data demand and command word enable (a data processor generated clock) to reset all latches to the address search mode.

The two counters that control the timing are not reset by this master reset but are reset to 000 when an address is recognized.

When the Central Station is commanded into the LSP formatting mode, no data demands are generated by the data processor and an alternative means of master reset must be used. A latch is used to generate the high data rate command sent to the data processor, and also to cause the last 1 mS of the 21 mS command execute period to be used as a master rest. This causes all commands to be 20 mS long while the Central Station is operating in the LSP formatting mode. P-1

5.1.5.3 Non-redundant command sequencer.- The command sequencer provides command 111 "LEAM CALIBRATE HIGH/LOW", to be sent twice (3 minutes and 34.7 seconds apart) with a cycle time of 15 hours, 27 minutes, and 24 seconds. Command 111 is also capable of being activated via the uplink as a discrete command.

The command sequencer provides for automatic switchover to the unused uplink at intervals of 61 hours, 49 minutes, and 34 seconds if the command "DELAY UPLINK SWITCHOVER", CMD 174, has not been executed during the current cycle. The first switchover occurs at 7 hours, 38 minutes, and 43 seconds after power is applied. Time intervals are doubled in the slow mode of operation (see Figure 5-1).

The command sequencer also provides the experiment ripple-off circuitry. The function of the ripple-off circuitry is to reduce the load on the power supply when required to maintain adequate reserve power (see Figure 5-2).

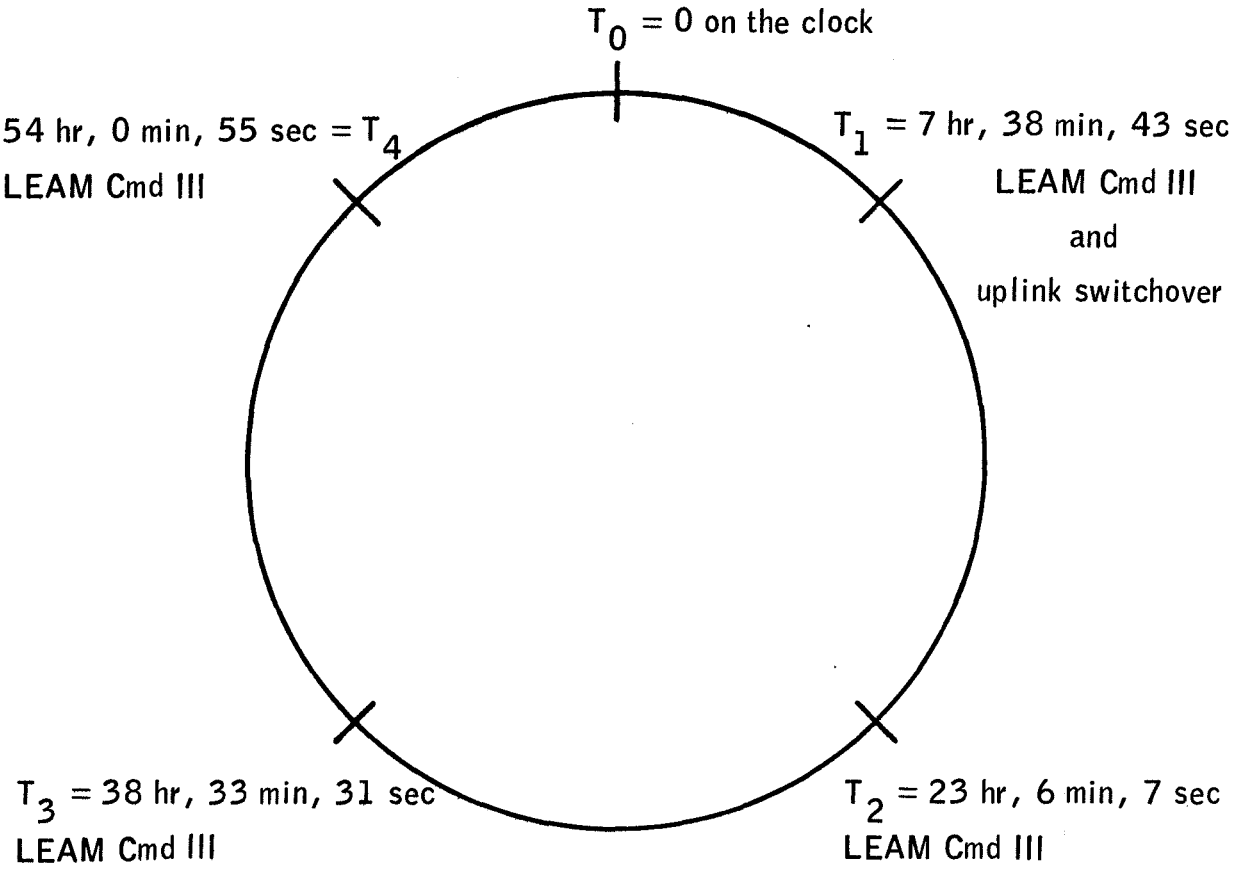

Notes: 1. The maximum clock time is 61 hr, 49 min, 35 sec.

2. Two LEAM Cmd III are sent 3 min 35 sec apart at T_1-T_4

Figure 5-1.- Periodic command pulses.

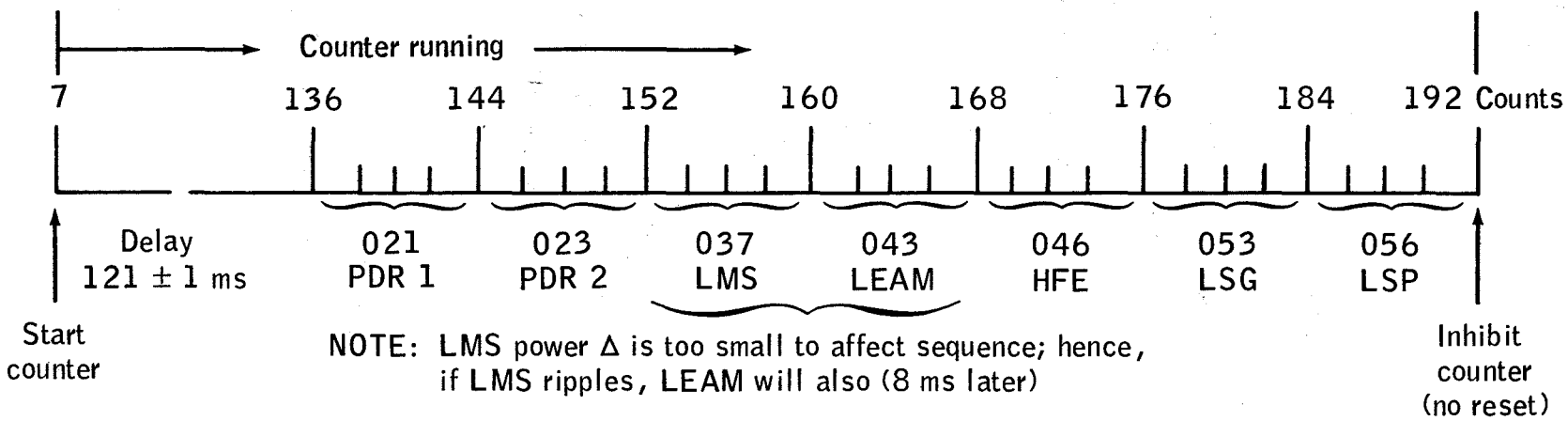

NOTE: LMS power Δ is too small to affect sequence; hence, if LMS ripples, LEAM will also (8 ms later)

- If overload exists for 121 ± 1 ms, then PDR off and EXPER STBY commands are issued sequentially for 8 counts each until overload no longer exists.
- When overload is cleared, the counter is reset automatically and no further ripple-off commands are issued.
- Note that experiments can not switch from off to standby; if they are off, they remain off.
- If counter runs to end, it may be a ripple-off malfunction; therefore, a lockout feature is provided to inhibit further counter action. EXPER/PDR should be reset by command and then issue CMD 032 to check performance.

Figure 5-2.- Ripple-off sequence.

5.2 COMMAND FUNCTIONS

003 LSP FMT ON — DATA PROCESSOR

Command 003 selects the DDP configuration that enables inputs from the LSP to the modulator and inhibits inputs from the digital multiplexer. When switching from DP format to LSP format by Command 003, the resulting LSP data rate will be normal or low (3533.3 bps or 1060 bps) depending on whether the DP data rate was normal or low (1060 bps or 530 bps). Command 003 takes effect at the end of the 64-word data frame which is in progress at the time the command is received.

*

005 DP FMT ON DATA PROCESSOR

Command 005 selects the DDP configuration that inhibits inputs from the LSP to the modulator and enables inputs from the digital multiplexer (including data from and demands to the other experiments). When switching to DP format by Command 005, the resulting DP data rate will be normal (1060 bps). Command 005 takes effect at the end of the 64-word data frame which is in progress at the time the command is received. Central station activation or power reset initializes the data processor in the DP FORMAT ON configuration.

006 NBR SEL DATA PROCESSOR

Command 006 selects the DDP timing configuration such that in the DP format mode the downlink data rate is 1060 bps and in the LSP format mode the downlink data rate is 3533.3 bps. In either DP or LSP format, Command 006 takes effect at the scheduled end of the 64-word data frame which is in progress at the time the command is received. Central station activation or power reset initializes the data processor to NORMAL BIT RATE.

007 LBR SEL DATA PROCESSOR

Command 007 selects the DDP timing configuration such that in the DP format mode the downlink data rate is 530 bps and in the LSP format mode the downlink data rate is 1060 bps. Command 007 takes effect at the scheduled end of the 64-word data frame which is in progress at the time the command is received.

*

012 XMTR A ON POWER DISTRIBUTION UNIT

Command 012 actuates relay K2, in both PDU's to the position that applies +29Vdc to transmitter A. XMTR A ON is the lunar surface initial condition.

013 XMTR A OFF POWER DISTRIBUTION UNIT | P-1

Command 013 actuates relay K2, in both PDU's, to the position that removes +29 Vdc from XMTR A.

014 XMTR B OFF POWER DISTRIBUTION UNIT

Command 014 actuates relay K1, in both PDU's, to the position that removes +29 Vdc from XMTR B and +12 Vdc from the diplexer switch. XMTR B OFF is the lunar surface initial condition.

015 XMTR B ON POWER DISTRIBUTION UNIT

Command 015 actuates relay K1, in both PDU's, to the position that applies +29 Vdc to XMTR B and +12 Vdc to the diplexer switch. If both transmitters are commanded on simultaneously, the output of XMTR B will be radiated downlink and the output of XMTR A will be dissipated in dummy load in the diplexer switch.

017 PDR 1 ON POWER DISTRIBUTION UNIT

Command 017 actuates relays K1 and K3 in series to the position that applies +29 Vdc to a 7 watt power dissipation resistor.

021 PDR 1 OFF POWER DISTRIBUTION UNIT

Command 021 actuates relays K1 and K3 in series to the position that removes +29 Vdc from the 7 watt power dissipation resistor. PDR 1 OFF is the lunar surface initial condition.

022 PDR 2 ON POWER DISTRIBUTION UNIT

Command 022 actuates relays K2 and K4 in series to the position that applies +29 Vdc to a 14 watt power dissipation resistor.

023 PDR 2 OFF POWER DISTRIBUTION UNIT

Command 023 actuates relays K2 and K4 in series to the position that removes +29 Vdc from the 14 watt power dissipation resistor. PDR 2 OFF is the lunar surface initial condition.

024 ADP X SEL POWER DISTRIBUTION UNIT

Command 024 actuates relays K1, K2, K4 in the PDU to the position that applies +5 Vdc, +12 Vdc, and -12Vdc to the X unit of tha analog data processor and removes +5 Vdc, +12 Vdc, and -12 Vdc from the Y unit. ADP X SEL is the lunar surface initial condition. P-1

025 ADP Y SEL POWER DISTRIBUTION UNIT

Command 025 actuates relays K1, K2, and K4 in the PDU to the position that applies +5 Vdc, +12 Vdc, and -12 Vdc to the Y unit of the analog data processor and removes +5 Vdc, +12 Vdc, and -12 Vdc from the X unit. P-1

NOTE

Switching ADP's in the DP format, normal or slow data rate, results in a temporary housekeeping sync loss but no change in data rate. P-1

027 APM 1 ON POWER CONDITIONING UNIT

Command 027 actuates a flip-flop, in the PCU, to the position that diverts RTG input power to a 30 watt, maximum power dissipation resistor if:

A. At least 2 watts of reserve power are on PCU 1 | P-1

B. Thermal plate temperature is above the temp switch 1 value - 60° F close, 80° F open.

The application of power to PCU 1 causes initialization in the APM 1 ON configuration.

031 APM 1 OFF POWER CONDITIONING UNIT

Command 031 actuates a flip-flop, in the PCU, to the position that inhibits APM 1 from dissipating RTG power.

032 RIPPLE-OFF RESET COMMAND DECODER

Command 032 resets the counter in the ripple-off sequencer thus restoring the ripple-off capability after the counter has run to the end and locked itself out. The reset configuration is automatically selected at turn-on.

034 DDP X SEL POWER DISTRIBUTION UNIT

Command 034 actuates relay K1, in both PDU's, to the position that applies +5 Vdc to the X unit of the digital data processor and removes the +5 Vdc from the Y unit. DDP X SEL is the lunar surface initial condition.

035 DDP Y SEL POWER DISTRIBUTION UNIT

Command 035 actuates relay K1, in both PDU's, to the position that applies +5 Vdc to the Y unit of the digital data processor and removes the +5 Vdc from the X unit.

NOTE

Switching DDP's in either format, DP or LSP format, normal or low data rate, results in Normal Data Rate in the same format.

036 LMS ON POWER DISTRIBUTION UNIT

Command 036 actuates relays K1 and K2, in both PDU's, to the position that applies +29 Vdc to the operating line of the LMS.

037 LMS STBY POWER DISTRIBUTION UNIT

Command 037 actuates relay K1, in both PDU's, to the position that removes +29 Vdc operational power from the LMS if it is in the OPERATE mode and applies +29 Vdc to the standby line. In the OFF mode, Command 037 has no effect.

041 LMS OFF POWER DISTRIBUTION UNIT

Command 041 actuates relays K1 and K2, in both PDU's, to the position that removes all +29 Vdc power from the LMS. LMS OFF is the lunar surface initial condition.

042 LEAM ON POWER DISTRIBUTION UNIT

Command 042 actuates relays K1 and K2, in both PDU's, to the position that applies +29 Vdc to the operating line of the LEAM.

043 LEAM STBY POWER DISTRIBUTION UNIT

Command 043 actuates relays K1, in both PDU's, to the position that removes 29 Vdc operational power from the LEAM if it is in the operate mode and applies +29 Vdc to the standby line. In the OFF mode, Command 043 has no effect.

044 LEAM OFF POWER DISTRIBUTION UNIT

Command 044 actuates relays K1 and K2, in both PDU's, to the position that removes all +29 Vdc power from the LEAM. LEAM OFF is the lunar surface initial condition.

*

045 HFE ON POWER DISTRIBUTION UNIT

Command 045 actuates relays K1 and K2, in both PDU's, to the position that applies +29 Vdc to the operating line of the HFE.

046 HFE STBY POWER DISTRIBUTION UNIT

Command 046 actuates relays K1, in both PDU's, to the position that removes +29 Vdc operational power from the HFE, if it is in the operate mode and applies +29 Vdc to the standby line. In the OFF mode, Command 046 has no effect.

050 HFE OFF POWER DISTRIBUTION UNIT

Command 050 actuates relays K1 and K2, in both PDU's, to the position that removes all +29 Vdc power from the HFE. HFE OFF is the lunar surface initial condition.

052 LSG ON POWER DISTRIBUTION UNIT

Command 052 actuates relays K1 and K2, in both PDU's, to the position that applies +29 Vdc to the operating line of the LSG.

053 LSG STBY POWER DISTRIBUTION UNIT

Command 053 actuates relays K1, in both PDU's, to the position that removes +29 Vdc operational power from the LSG if it is in the operate mode and applies +29 Vdc to the standby line. In the OFF mode, Command 053 has no effect.

054 LSG OFF POWER DISTRIBUTION UNIT

Command 054 actuates relays K1 and K2, in both PDU's, to the position that removes all +29 Vdc power from the LSG. LSG OFF is the lunar surface initial condition.

055 LSP ON POWER DISTRIBUTION UNIT

Command 055 actuates relays K1 and K2, in both PDU's, to the position that applies +29 Vdc to the operating line of the LSP. Astronaut switch 2 is in this line and telemetry will indicate LSP operational mode regardless of the state of switch 2.

056 LSP STBY POWER DISTRIBUTION UNIT

Command 056 actuates relay K1, in both PDU's, to the position that removes +29 Vdc operational power from the LSP, if it is in the operate mode and applies +29 Vdc to the standby line. The LSP has no standby mode and this line is not connected to the experiment. However, telemetry will show the standby mode. In the OFF mode, Command 056 has no effect. LSP STBY is the lunar surface initial condition.

057 LSP OFF POWER DISTRIBUTION UNIT

Command 057 actuates relays K1 and K2, in both PDU's, to the position that removes all +29 Vdc power from the LSP.

060 PCU 1 SEL POWER CONDITIONING UNIT

Command 060 actuates relay K1, in the PCU, to the position that applies +16 Vdc from the RTG to PCU 1 and disconnects PCU 2 from the RTG. In this configuration, PCU 1 provides power for the ALSEP system via PDU 1. PCU 1 is preset to be energized at initial lunar activation.

062 PCU 2 SEL POWER CONDITIONING UNIT

Command 062 actuates relay K1, in the PCU, to the position that applies +16 Vdc from the RTG to PCU 2 and disconnects PCU 1 from the RTG. In this configuration, PCU 2 provides power for the ALSEP system via PDU 2.

063 LSG HTR ON EXP 4 (LGS)

Command 063 turns the slave heater ON. The slave heater must remain on at all times except during tilt motor or mass change motor operation. P-1

064 LSG HTR OFF EXP 4 (LGS)

Command 064 turns the slave heater OFF. Prior to driving a tilt or mass change servo motor, CMD 064 must be transmitted in order to minimize the thermal disturbance by minimizing the peak power dissipation within the LSG. P-1

067 LSG CMD EX EXP 4 (LSG)

Command 067 executes the command currently in the command counter. The command counter is incremented and decremented by CMD 072 and CMD 074 respectively. Execution does not clear the command counter.

070 LSG DECODER ON EXP 4 (LSG)

Command 070 applies operating power to the LSG command decoder and resets the command counter to the "00000" state.

071 LSG DECODER OFF EXP 4 (LSG)

Command 071 removes operating power from the LSG command decoder.

072 LSG STEP UP EXP 4 (LSG)

Command 072 increments the command counter one step each successful execution.

074 LSG STEP DOWN EXP 4 (LSG)

Command 074 decrements the command counter one step each successful execution.

NOTE

LSG Command Counter and Commands:

An expanded command capability is accomplished in the LSG experiment by decoding a 5-Stage, "Up-Down" command counter. Thirty of the possible thirty-two states of the counter are used to generate command functions. State of the counter is read out through the telemetry link. P-1

Three command lines are used to step the command counter (up or down), CMD 072 and CMD 074, and to generate a command execute function, CMD 067.

Following is a list of all LSG experiment command counter states and the associated functional command assignments:

Command Symbol	Binary Count	Command Function
CG-8	00001	Read shaft encoder
CG-9	00010	Mass change motor ON
CG-10	00011	Bias in
CG-11	00100	Bias out
CG-12	00101	Integrator, normal mode
CG-13	00110	Integrator, short mode

LSG LIST - Concluded

Command Symbol	Binary Count	Command Function	
CG-14	00111	Seismic low gain	
CG-15	01000	Seismic high gain	
CG-16	01001	Sensor beam caged	
CG-17	01010	Sensor Beam uncaged	
CG-18	01011	Coarse screw servo ON	
CG-19	01100	Tilt, mass chg, screw servo, pressure transducer OFF	P-1
CG-20	01101	Pressure transducer ON	
CG-21	01110	Mass change increment	
CG-22	01111	Gross slew up/tilt increment up	
CG-23	10000	Gross slew down/tilt increment down	
CG-24	10001	Vernier slew up	
CG-25	10010	Vernier slew down	
CG-26	10011	Fine screw servo ON	
CG-27	10100	North/south tilt servo ON	
CG-28	10101	East/west tilt servo ON	
CG-29	10110	Temperature increment 1	P-1
CG-30	10111	Temperature increment 2	P-1
CG-31	11000	Temperature increment 3	P-1
CG-32	11001	Temperature increment 4	P-1
CG-33	11010	Temperature increment 5	P-1
CG-34	11011	Temperature increment 6	P-1
CG-35	11100	Temperature reset	
CG-36	11101	Post amp gain increment	
CG-37	11110	Post amp gain reset	

104 PER CMDS EN COMMAND DECODER

Command 104 actuates the command decoder enabling output of periodic commands (CMD 111) every 15.46 hours after the first output which is at 7.65 hours. Two outputs (CMD 111) occur within a 3.55 minute interval. The application of power to ALSEP causes initialization in the enable configuration.

105 PER CMDS INH COMMAND DECODER

Command 105 actuates circuitry in the command decoder to inhibit output of the periodic commands (CMD 111).

107 ADP BKUP POWER DISTRIBUTION UNIT

Command 107 actuates relay K3 in the PDU to the position that provides an alternate, redundant routing of +5 Vdc from PCU 1 and PCU 2 to the ADP selection relays. | P-1

110 ADP PRI POWER DISTRIBUTION UNIT

Command 110 actuates relay K3, in the PDU, to the position that provides the basic, redundant routing of +5 Vdc from PCU 1 and PCU 2 to the ADP/UPLINK selection relays. The primary routing is preset to be energized at initial lunar activation. | P-1

111 LEAM CAL EXP 2 (LEAM)

Command 111 activates the calibration control logic which injects a known signal into the experiment system. This signal is used to calibrate the overall sensor electronics and data storage system of the LEAM experiment. Two calibration levels, Mode 1 and Mode 2, shall be provided, to be selected alternately upon successive transmission of Command 111. This command is also generated automatically within ALSEP as a pair of commands 3.5 minutes apart, every 15.4 hours, unless inhibited by execution of CMD 105 (PER CMDS INH). P-1 (typo)

112 LEAM MIR CVR EXP 2 (LEAM)

Command 112 causes the one-time function of blowing off the LEAM thermal control mirror dust cover. This command is an irreversible function and is necessary to obtain LEAM scientific data.

113 APM 2 OFF POWER CONDITIONING UNIT

Command 113 actuates a flip-flop, in the PCU, to the position that inhibits APM 2 from dissipating RTG power.

114 LEAM SEN CVR EXP 2 (LEAM)

Command 114 causes the one-time function of blowing away the LEAM sensor dust cover. This command is an irreversible function and is necessary to obtain LEAM scientific data.

115 APM 2 ON POWER CONDITIONING UNIT

Command 115 actuates a flip-flop, in the PCU, to the position that diverts RTG input power to a 30 watt, maximum, power dissipation resistor if:

A. At least 2 watts of reserve power are on PCU 2 | P-1

B. Thermal plate temperature is above the temp switch 2 value - 60° F close, 80° F open. | P-1 (typo)

The application of power to PCU 2 causes initialization in the APM 2 ON configuration.

*

117 LEAM HTR STEP EXP 2 (LEAM)

Command 117 is a three-state command ON/OFF/AUTO. In the operational mode, the experiment should be capable of setting the heater ON, OFF, and to AUTO by succesive transmissions of CMD 117, regardless of the state of the automatic control. CMD 117 is inhibited in the survival mode.

120 PCU 1 AUTO SW POWER CONDITIONING UNIT

Command 120 actuates relay K2, in the PCU, to the position that enables automatic switchover from PCU 2 to PCU 1 when the +12 Vdc or +5 Vdc goes undervoltage or the -12 Vdc goes overvoltage for longer than 300 ms or when the +12 vdc goes overvoltage for longer than 5 ms (refer to Table 4-I). In this position, automatic switchover from PCU 1 to PCU 2 is inhibited. PCU 1 AUTO SW is present to be energized at lunar activation. P-1

121 PCU 2 AUTO SW POWER CONDITIONING UNIT

Command 121 actuates relay K2, in the PCU, to the position that enables automatic switchover from PCU 1 to PCU 2 when the +12 Vdc or +5 Vdc goes undervoltage or the -12 Vdc goes overvoltage for longer than 300 ms or when the +12 vdc goes overvoltage for longer than 5 ms (refer to Table 4-I). In this position, automatic switchover from PCU 2 to PCU 1 is inhibited. P-1

122 DECODER SW ENABLE COMMAND DECODER

Command 122 through the uplink switch flip-flop in the command decoder, actuates PDU relays K1, K2, and K4 removing power from the set of uplink components in use and applying power to the alternate, redundant components. All three voltages (+5 Vdc, +12 Vdc, and -12 Vdc) are switched for the command decoders and +12 Vdc is switched for the receivers. Repeated application of CMD 122 causes repeated selection alternating between RCVR/DECODER A and B. After a PCU switchover, CMD 122 may be required twice for the next switchover (if it is from uplink B to uplink A). Command 122, like CMD 104, enables the periodic commands.

NOTE

Command 122 does not actuate the backup power routing of +5 Vdc to the decoder as does automatic switchover.

123	LMS LOAD 1	EXP 1 (LMS)
124	LMS LOAD 2	EXP 1 (LMS)
125	LMS LOAD 3	EXP 1 (LMS)
127	LMS LOAD 4	EXP 1 (LMS)
132	LMS LOAD 5	EXP 1 (LMS)
133	LMS LOAD 6	EXP 1 (LMS)
134	LMS EX	EXP 1 (LMS)

Command 134 causes the execution of the command load currently in the LMS register and then clears the LMS register.

Octal commands 123 through 125, 127, and 132 through 134 inclusive, are encoded in specific sequences to provide 15 discrete commands for Experiment 1 (LMS) as follows:

Symbol	FUNCTION	123	124	125	127	132	133	134	
CA-1	Step Mult, Sweep HV ON & Back-up Htr Off	X	X					X	
CA-2	Lock (Sweep Hold) & J-Plate Voltage Step/Fixed	X		X				X	
CA-3	One Step (Sweep Advance)	X			X			X	
CA-4	Emission/Filaments OFF-								P-1
	Mode Sel Enable	X				X		X	
CA-5	Filament #1 ON	X					X	X	
CA-6	Filament #2 ON		X	X				X	
CA-7	Mult High & Back up Htr ON		X		X			X	
CA-8	Mult Low		X			X		X	
CA-9	Disc High and J-Plate Voltage								P-1
	Step Enable/Cyclic		X				X	X	
CA-10	Disc Low and J-Plate Voltage Step Inhibit			X	X			X	
CA-11	Bakeout Enable			X		X		X	
CA-12	Bakeout Disable			X			X	X	
CA-13	Dust Cover Removal			X	X			X	
CA-14	Ion Pump ON			X			X	X	
CA-15	Ion Pump, Mult, and Sweep HV OFF					X	X	X	

A brief description of the LMS command is listed below:

CA-1 . STEP MULT, SWEEP HV ON AND BACK-UP HTR OFF
(Commands 123 and 124 followed by 134) Execution of this command load turns the sweep and channeltron multiplier high voltage ON, turns the back-up heater OFF, and starts automatic sweep. | P-1

CA-2 LOCK (SWEEP HOLD) AND J-PLATE VOLTAGE STEP/FIXED
(Commands 123 and 125 followed by 134) Execution of this load command stops the analyser sweep on the step reached at the time CMD 134 is received and advances the J-plate voltage selection sequence to the next step, provided this capability has been enabled. Each successive step decreases the J-plate voltage. After the final step, the relay sequences return to the first (highest) voltage step. (4 step repeatable) | P-1 (typo) | P-1

With emission OFF, this command selects the fixed emission control.

*

CA-3 ONE-STEP (SWEEP ADVANCE)
(Commands 123 and 127 followed by 134) Execution of this command load advances the sweep to the next step when the experiment is in the sweep hold mode (command load CA-2).

CA-4 EMISSION/FILAMENTS OFF/MODE SEL ENABLE | P-1
(Commands 123 and 132 followed by 134) Execution of this command load turns OFF the emission filaments. EMISSION/FILAMENTS OFF is preset for LMS activation.

CA-5 FILAMENT 1 ON
(Commands 123 and 133 followed by 134) Execution of this command load applies power to emission filament 1.

CA-6 FILAMENT 2 ON
(Commands 124 and 125 followed by 134) Execution of this command load applies power to emission filament 2.

CA-7 MULT HIGH AND BACK-UP HTR ON

(Commands 124 and 127 followed by 134) Execution of this command load selects the HIGH voltage configuration for the multipliers and turns the back-up heater ON.

CA-8 MULT LOW

(Commands 124 and 132 followed by 134) Execution of this command load selects the LOW voltage configuration for the multipliers. The MULT LOW configuration is preset for LMS activation.

CA-9 DISC HIGH AND J-PLATE VOLTAGE STEP ENABLE/CYCLIC

(Commands 124 and 133 followed by 134) Execution of this command load selects the HIGH discriminator level in the particle counting and detection circuits and ENABLES the J-plate voltage step capability (CMD CA-2).

With emission OFF, this command selects the cyclic bias control. | P-1

CA-10 DISC LOW AND J-PLATE VOLTAGE STEP INHIBIT
(Commands 125 and 127 followed by 134) Execution of this command load selects the LOW discriminator level in the particle counting and detection circuits and INHIBITS the J-plate voltage step capability (CMD CA-2). The DISC LOW AND J-PLATE VOLTAGE STEP INHIBIT configuration is preset for LMS activation.

CA-11 BAKEOUT ENABLE
(Commands 125 and 132 followed by 134) Execution of this command load ENABLES the bakeout configuration. After CA-11, the LMS must be commanded to STANDBY (CMD 037) to perform bakeout.

CA-12 BAKEOUT DISABLE
(Commands 125 and 133 followed by 134) Execution of this command load causes bakeout to be DISABLED. The BAKEOUT DISABLE configuration is preset for LMS activation.

*

CA-13 DUST COVER REMOVAL

(Commands 127 and 132 followed by 134) Execution of this command load actuates the dust cover REMOVAL circuitry.

CA-14 ION PUMP ON

(Command 127 and 133 followed by 134) Execution of this command load turns the ion pump ON. Execution of CA-14 is inhibited if CA-1 has been successfully executed; if CA-14 is inhibited, then CA-15 must be executed before CA-14. CA-1 is not inhibited if the ion pump is ON.

CA-15 ION PUMP, MULT, AND SWEEP HV OFF

(Command 132 and 133 followed by 134) Execution of this command load turns the ion pump, the high voltages for the electron multipliers and the sweep OFF. The ION PUMP, MULT, AND SWEEP HV OFF configuration is preset for LMS activation.

*

135 HFE MODE/G SEL EXP 3 (HFE)

This command (C1) is a one-state command. It places the HFE in the normal or gradient mode of operation (Mode 1) such that data is obtained from the gradient sensors and cable thermocouples under the control of the measurement sequencer programer. It also turns off the probe heater current supply. At turnon, the HFE is initialized in this condition.

136 HFE MODE/LK SEL EXP 3 (HFE)

This command (C2) is a one-state command. It places the HFE in the low conductivity or ring source mode of operation (Mode 2) such that data is obtained from the gradient sensors and cable thermocouples under the control of the measurement sequencer programer. It also turns on the probe heater current supply in the low (or ring source) mode allowing heaters to be activated via Command 152.

140 HFE MODE/HK SEL EXP 3 (HFE)

This command (C3) is a one-state command. It places the HFE in the high conductivity or heat pulse mode of operation (Mode 3) such that data is obtained from the ring (or remote) sensors under the control of the heater excitation programer. It also turns on the probe heater current supply in the high (or heat pulse) mode allowing heaters to be activated by Command 152.

141 HFE SEQ/FUL SEL EXP 3 (HFE)

This command (C4) is a one-state command. It cancels the effect of measurement Commands 142 through 146 and thereby causes the measurement sequence programer to perform its full 16-state cycle of operation. If transmitted during operation in MODE/HK, this command will cause invalid data. At turnon, the HFE is initialized in this condition.

142 HFE SEQ/P1 SEL EXP 3 (HFE)

This command (C5) is a one-state command and alternates with Command 143 to select only one probe for measurement. In MODE/G and MODE/LK it causes the measurement sequence programer to lock the second flip-flop (P2) in the clear state and bypass that step; that is, act as an eight-state counter if Command 141 was previously executed or as a two-state counter if Command 144, 145, or 146 was previously executed. In MODE/HK, this command doubles the recognized data rate. It is cleared by subsequent execution of Command 141. | P-1

143 HFE SEQ/P2 SEL EXP 3 (HFE)

This command (C6) is a one-state command and alternates with Command 142 to select only one probe for measurement. In MODE/G and MODE/LK it causes the measurement sequence programer to lock the second flip-flop (P2) in the set state and bypass that step; that is, act as an eight-state counter if Command 141 was previously executed or as a two-state counter if Command 144, 145, or 146 was previously executed. In MODE/HK this command halves the data rate. It is cleared by subsequent execution of Command 141. | P-1

144 HFE LOAD 1 EXP 3 (HFE)

This command (C7) is a one-state command and is used alone or in combination with either Command 145 or 146 to position and lock the measurement sequence programer's third and fourth flip-flops (P_4P_3). It places these two flip-flops in the clear position (00) and bypasses those steps; thus the MSP acts as a four-state counter if Command 141 was previously executed and as a two-state counter if either Command 142 or 143 was previously executed. In MODE/HK this command must be executed, otherwise the data will be invalid. Subsequent execution (in MODE/G or MODE/LK) of Command 145 locks P_4P_3 in the 01 or 10 state respectively. All positioning and locking of P_4P_3 is cleared by subsequent execution of Command 141.

145 HFE LOAD 2 EXP 3 (HFE)

This command (C8) is a one-state command and is used in combination with either Command 144 (preceding 145) or Command 146 (preceding or subsequent to 145) to position and lock P_4P_3 (see 144). It sets P_3; therefore, 144 followed by 145 placed P_4P_3 in the 01 state. In combination with 146, it places P_4P_3 in the 11 state. Depending on whether Command 141 was previously executed or one of Commands 142 or 143, the MSP acts as a four-state or two-state counter. Execution of this command in MODE/HK causes invalid data until Command 144 is executed. It is cleared by subsequent execution of Command 141.

146 HFE LOAD 3 EXP 3 (HFE)

This command (C9) is a one-state command operating essentially the same as Command 145 except that it sets P_4. Therefore, when preceded by 144 it places P_4P_3 in the 10 state.

152 HFE HTR STEPS EXP 3 (HFE)

This command (C10) is a 16-state command which advances the heater excitation programer ($H_4H_3H_2H_1$) each time the command is executed. In MODE/G the programer advances but there is no other effect since the probe heater current supply is off. In MODE/LK the execution of Command 152 alternates the heater status between on and off, simultaneously stepping through the eight heaters (current supply in on full time, and heater elements are switched in and out of circuit). In MODE/HK the heater excitation programer (advanced by Command 152) also selects the data to be sampled. The HF heater advance steps through following 16-step sequence, one step per command:

All heaters off	All heaters off
Probe #1 heater #2 ON	Probe #2 heater #2 ON
All heaters off	All heaters off
Probe #1 heater #4 ON	Probe #2 heater #4 ON
All heaters off	All heaters off
Probe #1 heater #1 ON	Probe #2 heater #1 ON
All heaters off	All heaters off
Probe #1 heater #3 ON	Probe #2 heater #3 ON

NOTE

HFE commands are executed at the ALSEP 90 frame mark; therefore, there must be 54 seconds delta time between transmission of commands to the HFE in NBR and 108 seconds in LBR.

*

156 LSP XMTR ON EXP 5 (LSP)

Command 156 activates the LSP xmtr which operates at 41.2 MHZ and transmits time-coded fire pulse sets (3 per set) at 29.55-second intervals to cause detonation of an explosive package, provided that timer-controlled functions are in the proper configuration to accept, arm, and execute the firing input. CMD 156 is to be transmitted (hence, LSP xmtr on) before the first normal arm time through the detonation of the last explosive package in each group. Presence of LSP xmtr function | P-1 is read out in the LSP TM. Repeated application of CMD 156 has no further effect.

162 LSP XMTR OFF EXP 5 (LSP)

Command 162 deactivates the LSP transmitter. Repeated application of Command 162 has no further effect.

163 LSP GAIN NORM EXP 5 (LSP)

Command 163 selects the normal, high-gain mode of operation of the LSP geophone amplifier. Repeated application of CMD 163 has no further effect.

164 LSP GAIN LOW EXP 5 (LSP)

Command 164 selects the LOW-gain mode of operation of the LSP geophone amplifier. Repeated application of Command 164 has no further effect.

170 LSP GEO CAL EXP 5 (LSP)

Command 170 causes the seismic detection system to switch to the calibration mode for approximately 1.5 seconds. This produces a relative calibration of all four geophone channels for comparison to an absolute preflight calibration, to detect any changes in such parameters as geophone resonant frequency and system sensitivity. Repeated application of CMD 170 causes repeated switchovers to the calibration mode.

*

174 DECODER SW INH COMMAND DECODER

Command 174 sets a one-time inhibit circuit in the command decoder such that the next 61-hour pulse does not cause switchover to the opposite receiver/decoder. Only one 61-hour pulse can be inhibited at a time. The switchover inhibit is cleared 3.5 minutes after the scheduled 61-hour pulse. Application of power to ALSEP causes initialization in the no-delay configuration.

Figure 5-3.- Command decoder flow diagram.

THIS FIGURE
DELETED
BY PCN-1

*

TABLE 5-I.- PRESET AND LUNAR INITIAL CONDITIONS OF SUBSYSTEMS

SUBSYSTEM	COMMAND	FUNCTION	INITIALIZES TO	LUNAR INITIAL CONDITION	
TM	005	DP FMT ON	ON		
TM	006	NORMAL BIT RATE	NORMAL		
TM	012	XMTR A ON		XMTR A ON	
TM	014	XMTR B OFF		XMTR B OFF	
EPS	021	PDR 1 OFF		PDR 1 OFF	
EPS	023	PDR 2 OFF		PDR 2 OFF	
TM	024	ADP X SEL		ADP X SEL	
EPS	027	APM 1 ON	ON		
TM	032	RIPPLE-OFF RESET	RESET		
TM	034	DDP X SEL		DDP X SEL	
LMS	041	EXP 1 OFF (LMS)		LMS OFF	
LEAM	044	EXP 2 OFF (LEAM)		LEAM OFF	
HFE	050	EXP 3 OFF (HFE)		HFE OFF	
LSG	054	EXP 4 OFF (LSG)		LSG OFF	
LSP	056	EXP 5 STBY (LSP)		LSP STBY	
PCU	060	PCU 1 SEL		PCU 1 SEL	
TM	104	PER CMDS ENABLE	ENABLE		
EPS	110	UPLINK/ADP PWR RELAY W SEL		UPLINK/ADP PWR RELAY W SEL	P-1
EPS	115	APM 2 ON	ON		
EPS	120	PCU AUTO SEL 1		PCU AUTO SEL 1	
HFE	135	HFE MODE/G SEL	GRADIENT MODE		
HFE	141	HFE SEL/FUL SEQ	FULL 16-STEP MEAS SEQ		P-1
LMS	(CA-4)	EMISSION FILAMENTS OFF	OFF		
LMS	(CA-8)	MULTIPLIERS LOW		MULT LOW	P-1
LMS	(CA-10)	DISC LOW AND J-PLATE VOLTAGE STEP INHIBIT	DISC LOW AND J-PLATE VOLTAGE STEP INHIBIT		
LMS	(CA-12)	BAKEOUT DISABLE	BAKEOUT DISABLE		
LMS	(CA-15)	ION PUMP, MULT AND SWEEP HV OFF	OFF		

LTR	PCN	DR	ENGR	DATE	APPROVAL
	1				

COMMENTS:

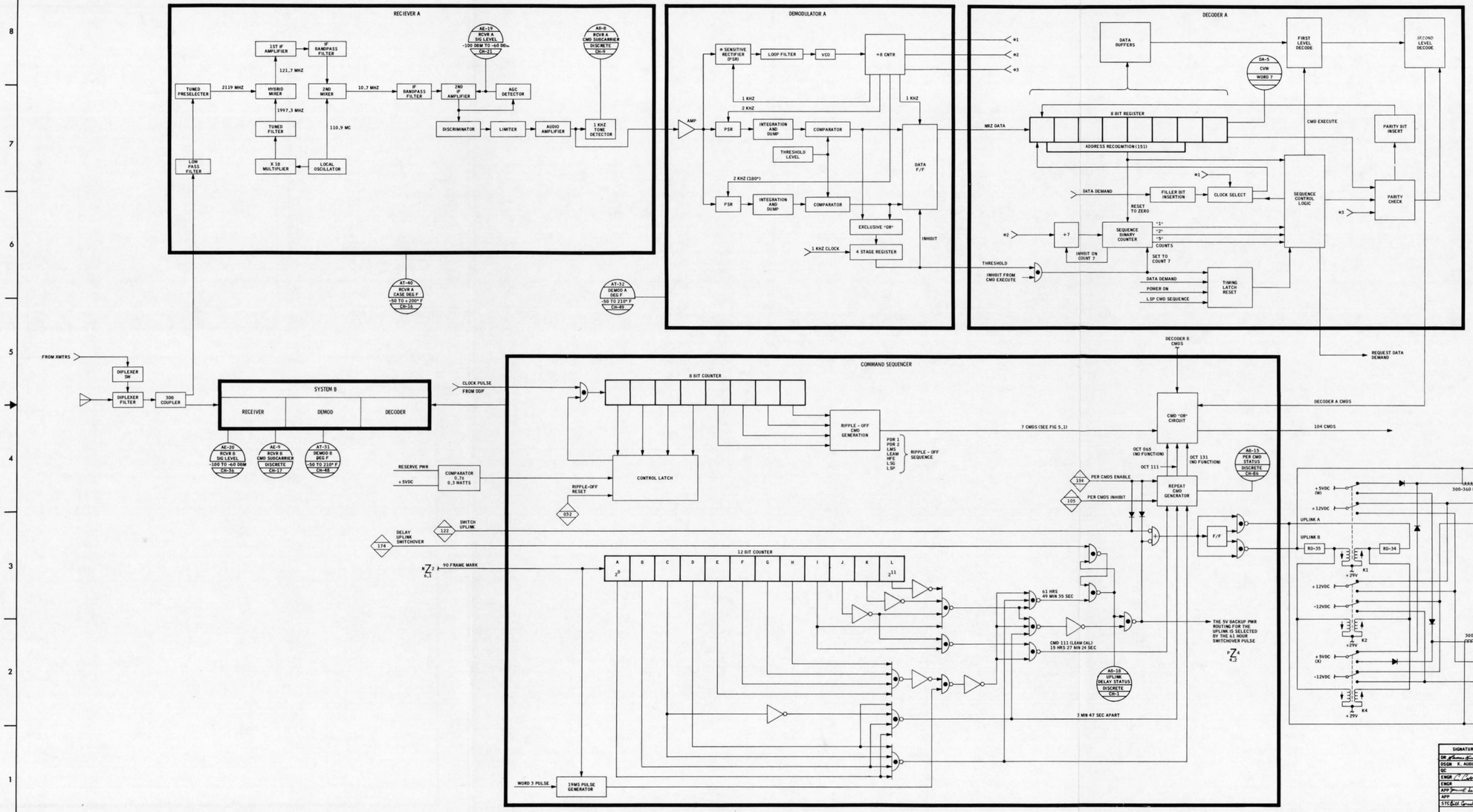

SIGNATURES	DATE	NATIONAL AERONAUTICS & SPACE ADMINISTRATION MANNED SPACECRAFT CENTER - HOUSTON, TEXAS
DR		COMMAND SUBSYSTEM
DSGN K. AUBUCHON		
QC		
ENGR	8-8-72	
ENGR		
APP	8-8-72	ALSEP 5 / APOLLO 17 — DWG NO 5.1
APP	8-8-72	66 X 34 — PAGE 5-56 — SHEET 1 OF 1

SECTION 6

TELEMETRY SUBSYSTEM

6.1 SYSTEM DESCRIPTION

The telemetry subsystem consists of central station sensors, experiment sensors, two analog multiplexers, two analog-to-digital converters, two digital data processors, two S-band transmitters, one diplexer switch, one diplexer filter, and a common S-band transmit/receive helix antenna.

6.1.1 Sensors (Transducers)

Analog sensors convert such parameters as temperature, voltage, current, and status into 0 to +5 volt signals and input these signals to the 90 channel analog multiplexers as engineering (housekeeping) data to indicate the condition of the central station, RTG, LEAM, LMS, LSP, LSG, and HFE.

Scientific measurements from the experiment sensors and experiment status, calibration, and temperature data are converted within each experiment to digital data and applied to the X and Y digital data processors at the proper demand time in serial form.

6.1.2 Analog Multiplexers

Analog engineering (housekeeping) data are applied to the redundant 90 channel analog multiplexers. Selection of the redundant multiplexer can be accomplished by Command 024 or 025. The multiplexer is divided into 15 groups of six column gates each, and the group outputs are further gated through a tier of eight row gates. The channel advance pulse generated in the digital data processor (occurs at the time of the sixty-fourth main frame word) is applied to the analog multiplexer sequencers to advance the multiplexers to the next channel after each A/D conversion for ALSEP word 33. Between each of these samples, the multiplexer samples reserve current and puts it in ALSEP word 63 (DA-08). The sequencers generate a ninetieth-channel output pulse that is used to reset the frame counter located in the digital data processor. The output of the analog multiplexer is buffered by amplifiers at the input to each A/D converter.

P-1

P-1

6.1.3 A/D Converters

The A/D converters encode the analog signal from the multiplexer into an 8-bit digital word when an encode pulse from the selected digital data processor occurs (twice every digital data processor main frame). The 8-bit digital word is input serial to the selected digital data processor, X or Y, at words 33 and 63 of the ALSEP main frame. Selection of the redundant A/D converter, X or Y, is accomplished by CMD 024 or 025, respectively. P-1

6.1.4 Digital Data Processor

Redundant digital data processors (X and Y) are provided. The redundant processors are selectable by ground Command 034 or 035. The processor that is selected receives data in a serial form from the selected A/D converter, the command decoder, and experiments. The data are formatted into a serial NRZC format and then encoded into a split-phase signal and applied to the transmitter. P-1

There are two output formats: data processor format and LSP format, selected by Commands 005 and 003, respectively. The normal data rate and low data rate can be selected by ground Commands 006 and 007, respectively. The data processor configurations are as follows: P-1

	Normal Bit Rate	Low Bit Rate
DP Format	1060 bps	530 bps
LSP Format	3533.3 bps	1060 bps

The first three words of the ALSEP main frame are used for the sync code. The bit assignment for the sync word is shown in Figure 6-2. Bits 23 through 29 are provided to identify channels 1 through 90 for correlation of the analog multiplexer data. Bits 21 through 29 are derived from a ripple-through counter which is advanced one step whenever Word 1 of the ALSEP main frame occurs and is reset by a ninetieth-frame signal generated by the analog multiplexers. When power is applied to the data processor, bits 23 through 29 will be a random count between 0 and 127 and cannot be used to determine the position of the multiplexers until the ninetieth-frame reset signal is received from the analog multiplexers. | P-1

Each of the redundant processors has a power reset circuit. This circuit will reset the processor to the normal data rate in the DP format if there is a momentary drop in the +5 Vdc line.

The data processor will generate and provide all necessary timing signals to the experiments, command decoder, A/D converter, and the 90-channel analog multiplexers (see Table 6-I).

ALSEP word assignment for array E

1 SYNC	2 SYNC	3 SYNC & ID	4 LSG	5 LMS	6 LSG	7 COMMAND VERIFI-CATION	8 LSG
9 N/A	10 LSG	11 N/A	12 LSG	13 N/A	14 LSG	15 N/A	16 LSG
17 LMS	18 LSG	19 LMS	20 LSG	21 LMS	22 LSG	23 HF	24 LSG
25 LSG	26 LSG	27 LSG	28 LSG	29 LSG	30 LSG	31 LEAM	32 LSG
33 HOUSE-KEEPING	34 LSG	35 LSG	36 LSG	37 LSG	38 LSG	39 LEAM	40 LSG
41 N/A	42 LSG	43 N/A	44 LSG	45 N/A	46 LSG	47 N/A	48 LSG
49 N/A	50 LSG	51 N/A	52 LSG	53 N/A	54 LSG	55 N/A	56 LSG
57 N/A	58 LSG	59 N/A	60 LSG	61 N/A	62 LSG	63 RESERVE POWER	64 LSG

Each square represents 1 10-bit word. Total matrix = 10 x 64 = 640 bits/frame
N/A = not assigned

	Number of words per main frame
Control words (sync)	3
Lunar Mass Spectrometer Experiment	4
Command verification (8 bits upon command, otherwise all zeros)	1
Lunar Surface Gravimeter Experiment	36
Heat Flow Experiment	1
Lunar Ejecta and Meteorite Experiment	2
Housekeeping	1
Reserve power	1
Words not used (zeros are sent for each empty word)	15
Total	64

Figure 6-1.- Main frame format.

TABLE 6-I.- TIMING FROM DIGITAL PROCESSOR

SIGNALS FROM DATA PROCESSOR	SIGNAL TO							
	CMD DECODER	LMS	LEAM	HFE	LSG	LSP	ANALOG MUX & A/D CONV	
Shift pulse	X	X	X	X	X		X	P-1
Data gate					X			
Frame mark		X	X	X	X			
Data demand	X	X	X	X	X		X	P-1
A/D encode clock							X	
Advance pulse							X	
90th frame mark	X	X	X	X	X			P-1
3.53 KHz clock						X		
28.226 KHZ clock						X		P-1

6.1.5 Transmitter

Array E contains two identical transmitters. Each unit accepts digital data from the Data Processor and utilizes it to modulate a rf carrier. The modulated rf signal is amplified and frequency multiplied so as to provide an output signal of approximately one watt at an S-Band frequency of 2275.5 MHz.

A crystal oscillator stage generates a 95 MHz rf signal which is phase modulated by the Manchester Coded Digital Data. The modulated signal is then amplified and passed through a two pole band pass filter. The filtered signal is then frequency quadrupled by a common emitter transistor stage. The 380 MHz signal is then passed through a third two pole band pass filter. The signal is then frequency doubled by a common emitter frequency multiplier and amplified. The 760 MHz signal is then power amplified. A signal of about 2 1/2 watts is then applied to a varactor diode frequency tripler. The resulting S-Band signal is filtered and outputted to the Diplexer and antenna. |P-1 |P-1

The Regulator converts the +29 volt supply from the power subsystem to two supply voltages. A +17 volt supply line powers the low power stages of the transmitter and the temperature telemetry sensor circuitry. A +23 volt supply line powers the power amplifier stages of the transmitter. The power supply regulator is a single encapsulated unit.

6.1.6 Diplexer Switch

The diplexer switch is utilized to couple the selected transmitter (A or B) output through the diplexer filter to the antenna. The direction of the diplexer switch (thus the selection of transmitter A or B output) is controlled by activating a ferrite device, within the circulator, by a magnetic field from a coil which is energized by +12 Vdc. The +12 Vdc is applied when transmitter B is on CMD 015.

*

	ALSEP WORD #1										ALSEP WORD #2										ALSEP WORD #3									
Bit	1	2	3	4	5	6	7	8	9	10	11	12	13	14	15	16	17	18	19	20	21	22	23	24	25	26	27	28	29	30
	1	1	1	0	0	0	1	0	0	1	0	0	0	0	1	1	1	0	1	1	0	1	F1	F2	F3	F4	F5	F6	F7	M
	BARKER CODE										COMPLEMENT OF BARKER CODE										FRAME COUNTER (1, 2, 3,...,89, 0)									MODE BIT

Symbol	Name	ALSEP Words	Range/Comments	Bits/ Sample	Samples/ Second
DA-1	Barker Code and Complement	1, 2 and bits 1 and 2 of word 3	NA	22	1.66
DA-2	Frame Count (F_i)(2)	Bits 3 thru 9 of word 3	1 to 89, and 0.	7	1.66
DA-3	Mode Bit (M)	Bit 10 of word 3 in Main Frames 1 and 2	1, 0 = Normal (1060 bits/sec) 0, 1 = Slow (530 bits/sec)	2	0.0184
DA-4	ALSEP Identification	Bit 10 of word 3 in Main Frames 3 (MSB), 4, and 5 (LSB)	Data Processor Identification Array E code is 1, 0, 0	3	0.0184
DA-5	Command Verification Word(1)	Bits 3 thru 9 of word 7	1 to 127	7	NA
DA-6	Received Command MAP (Message Acceptance Pulse)	Bit 10 of word 7	0 = Command Parity check failed 1 = Bit by bit check of command and complement verified	1	NA
DA-7	CVW Filler Bits	Bits 1 and 2 of word 7	Bit 3 (MSB) of word 7 (CVW) serves as filler bit value for bits 1 and 2. i. e., bits 1 and 2 will be same as bit 3.	NA	NA
DA-8	Reserve Current	63 (Bits 3 thru 9)	0 to 4 Amps	8	1.66
DA-9	Analog Word Filler Bits	Bits 1 and 2 of words 33 and 63	Bits 1 and 2 will be zeros	2	3.32

P-1

(1) Verifies reception and decoding of commands by retransmission of received command word. CVW information will be all zeros (10 bits) when commands are not being processed.

(2) Frame count reads 1 to 89 for Channels 1 to 89. Frame count reads 0 for Channel 90.

Figure 6-2.- Control and command verification word format.

TABLE 6-II.- ANALOG MULTIPLEXER, A/D CONVERTER CHARACTERISTICS

Analog multiplexer (subcommutated)		
Input (from sensors or signal conditioners)	0 to +5 Vdc	
Channels/frame	90 max	
Seconds/frame (normal bit rate)	54.34	
Seconds/frame (low bit rate)	108.68	
Redundancy	X or Y multiplexer	
A/D converters		
Input (from analog mux)	0 to +5 Vdc	
Conversion	8 bits	
Data to D/P	Serial	P-1
Time slot in main frame	Word 33 and 63	
Redundancy	Total	
Input from 0 to +5 volts	Outputs 0 to 255 PCN count	P-1
Input from +5 to +8 volts	Outputs 255 decimal PCM count	
		P-1

TABLE 6-III.- DIGITAL DATA PROCESSOR CHARACTERISTICS

	MODES OF OPERATION*			
PARAMETER	NORMAL	SLOW	LSP NORMAL	LSP SLOW
Data rate (bps)	1060	530	3533.3	1060
Bits/word	10	10	30	30
Words/frame	64	64	60	60
Frame/second	1.656	0.828	1.963	0.588
Seconds/frame	0.604	1.208	0.509	1.698
Bits/sync word	22	22	10	10

*There are four modes of operation available for the telemetry system. The Normal mode of operation downlinks data at 1060 bits per second (bps) from the Central Station and four of the five experiments (LEAM, LMS, HFE, and LSG). A backup Slow mode may be selected to provide the same data at the lower rate of 530 bps. Two other operating modes are provided exclusively for LSP operation. In the LSP Normal mode data is downlinked at 3533.3 bps and includes LSP data and critical Central Station housekeeping items which are multiplexed into the LSP telemetry format. In the LSP Slow mode of operation, the same LSP and C/S data are downlinked at 1060 bps. In both LSP modes other experiment data is inhibited.

NOTE

Words 1, 2, and 3 are control words. Word 33 of the main frame contains housekeeping data from the analog mux/A/D converter. Word 7 contains the command verification word. The two MSB's of Words 33 and 7 are filler bits inserted by the digital data processor. All main frame words are downlinked MSB first.

DA-4 contains the ALSEP indentification in bit 10 of word 3 in main frames 3(MSB), 4, and 5(LSB).

Frame 3 1 (MSB)

Frame 4 0

Frame 5 0

TABLE 6-IV.- TIMING AND CONTROL PULSE CHARACTERISTICS

Pulse type	Duration (μsec)	Repetion rate	
Frame mark	118	Once per ALSEP frame	P-1
mark			P-1
90th frame	118	Once every 90th frame	
Data gate (word mark)	118	64, once per each 10-bit word in frame	
Data demand	9434	Once per word in ALSEP frame	
Shift pulse	472	640 pulses per frame 1060 pulses per second	P-1
Command	21,000	Asynchronous	P-1

NOTE

Duration in TABLE 6-IV is given for normal bit rate in the DP Formating mode. In slow bit rate in the DP Formating mode the duration is twice that shown for normal bit rate.

TABLE 6-V.- TELEMETRY SUBSYSTEM POWER REQUIREMENTS

COMPONENT	VOLTAGE BUS	WATTS
Data processor X or Y	+5 VDC	.750
	+12 VDC	.850
	-12 VDC	.420
	+29 VDC	.015
Analog multiplexer and A/D converter X or Y	+5 VDC	.225
	+12 VDC	.245
	-12 VDC	.200
Transmitter A	+29 VDC	9.0
Transmitter B	+29 VDC	9.0
Diplexer switch	+12 VDC	0.10

P-1

TABLE 6-VI.- TRANSMITTER CHARACTERISTICS

Frequency	2275.5 mHz
Modulation	PM ± 1.25 radian, phase-modulated carrier
Stability (long-term)	±0.0025 percent/year
Power output	1 watt minimum
Power input	9.0 watts
TM parameters	8 (AE-15, AE-16, AE-17, AE-18, AT-23, AT-24, AT-25, and AT-26)

P-1

TABLE 6-VII.- CHANNEL AND MEASUREMENT ASSIGNMENTS FOR ANALOG MULTIPLEXER (ALSEP WORD 33)

Channel Number	Data Symbol	Function or Description	
1	AB-18	Uplink Switch Delay Status	
2	AE-1	0.25 Vdc Calibration	
3	AE-2	4.25 Vdc Calibration	
4	AT-3	Thermal Plate Temp 1	
5	AE-4	PCU Input Current	
6	AR-1	RTG Hot Frame 1 Temp	
7	AR-4	RTG Cold Frame 1 Temp	
8	AE-3	PCU 1 Input Voltage	
9	AB-8	Rcvr A Command Subcarrier Status	
10	AG-2	LSG Tide Signal	P-1
11	AE-23	PCU 2 Input Voltage	
12	AB-4	Pwr Distribution Status Exp 1 and 2	
13	AB-16	PC Autoswitch Status	
14	AB-5	Pwr Distribution Status Exp 3 and 4	
15	AT-10	Bottom Structure Temp	
16	AT-40	Rcvr Case Temp (Uplink A only)	
17	AB-9	Rcvr B Command Subcarrier Status	
18	AT-23	Transmitter A Pwr Amplifier Temp	
19	AT-24	Transmitter A Case Temp	
20	AE-7	PCU Output Voltage 1 (+29Vdc)	
21	AE-19	Rcvr A Input Signal Level	
22	AE-18	Transmitter B 23-Volt Reg Output	
23	AG-3	LSG Free Mode Oscillation Signal	
24	AG-7	LSG Oscillator Amplitude	P-1
25	AP-1	LSP Electronics Internal Temp	
26	AB-6	Uplink A/B and Pwr Routing Status	
27	AT-1	Sunshield Temp 1 (Top)	
28	AT-4	Thermal Plate Temp 2	
29	AH-1	HFE Supply Voltage No. 1 (5v)	
30	AE-24	Reserve Current	
31	AT-25	Transmitter B Pwr Amplifier Temp	
32	AT-26	Transmitter B Case Temp	
33	AT-27	Data Processor Base Temp	
34	AT-28	Data Processor Internal Temp	
35	AE-21	APM 1 Current	
36	AE-20	Rcvr B Input Signal Level	
37	AR-2	RTG Hot Frame 2 Temp	
38	AG-8	LSG Power Converter (+15v)	
39	AG-1	LSG Seismic Signal	
40	AM-1 to AM-16	LMS, 16 Functions Submultiplexed	P-1
41	AM-41	LMS Electronics Temp	
42	AT-2	Sunshield Temp 2	
43	AT-5	Thermal Plate Temp 3	
44	AM-44	LMS Sweep High Voltage	
45	AH-2	HFE Supply Voltage No. 2 (-5v)	
46	AT-14	Front Structure Temp	
47	AT-15	Rear Structure Temp	
48	AT-31	Decoder B Demodulator Temp	
49	AT-32	Decoder A Demodulator Temp	
50	AE-9	PCU Output Voltage 2 (+12Vdc)	
51	AE-15	Transmitter A 17-Volt Reg Current	
52	AR-3	RTG Hot Frame 3 Temp	
53	AG-9	LSG Power Converter (-15v)	
54	AG-6	LSG Mass Changing Error Signal	
55	AH-3	HFE Supply Voltage No. 3 (+15v)	
56	AE-22	APM 2 Current	
57	AH-6	HFE High Conductivity Htr Pwr Status	
58	AT-6	Thermal Plate Temp 4	
59	AT-8	Vertical Structure 1 Temp	
60	AT-12	Thermal Bag Inner Temp	
61	AT-41	APM 1 Temp	
62	AT-34	PDU 1 Temp	
63	AT-35	PDU 2 Temp	
64	AT-42	APM 2 Temp	
65	AE-10	PCU Output Voltage 3 (+5v)	
66	AE-16	Transmitter B 17-Volt Reg Current	
67	AR-5	RTG Cold Frame 2 Temp	
68	AG-4	LSG Htr Box Temp	
69	AG-10	LSG Power Converter	
70	AB-10	DDP x/y Status	
71	AT-7	Thermal Plate Temp 5	
72	AT-13	Thermal Bag Outer Temp	
73	AB-11	LSP Pwr Distribution Status	
74	AH-4	HFE Supply Voltage No. 4 (-15v)	
75	AH-7	HFE Low Conductivity Htr Pwr Status	
76	AB-13	APM Status	
77	AT-38	PCU Regulator 1 Temp	
78	AT-39	PCU Regulator 2 Temp	
79	AE-11	PCU Output Voltage 4 (-12v)	
80	AB-14	Pwr Dumps 1 and 2 Status	
81	AE-17	Transmitter A 23-Volt Reg Output	
82	AR-6	RTG Cold Frame 3 Temp	
83	AJ-1 to AJ-5	LEAM, 5 Submultiplexed Engr Data	
84	AJ-6 to AJ-10	LEAM, 4 Submultiplexed Temps and 1 Engr Datum	
85	AJ-11	LEAM Electronics Survival Temp	
86	AB-15	Periodic Commands Enable/Inhibit Status	
87	AT-9	Vertical Structure 2 Temps	
88	AT-11	Pwr Dump Module Temp	
89	AG-5	LSG Instrument Housing Pressure	
90	AB-17	ADP x/y and Pwr Routing Status	

TABLE 6-VIII.- ANALOG CHANNEL USAGE

CENTRAL STATION:

SYMBOL	LOCATION/NAME	CHANNEL	TRANDUCER RANGE		NOMINAL OPERATING LIMITS		REDLINE LIMITS (IF APPLICABLE)	
			LOW	HIGH	LOW	HIGH	LOW	HIGH
	STRUCTURAL/THERMAL TEMPERATURES							
AT-1	Sunshield Temp 1	27	-300° F	300° F	-300° F	160° F	-350° F	304° F
AT-2	Sunshield Temp 2	42	-300° F	300° F	-300° F	160° F	-350° F	304° F
AT-3	Thermal Plate Temp 1	4	-50° F	210° F	11° F	103° F	-10° F	140° F
AT-4	Thermal Plate Temp 2	28	-50° F	210° F	19° F	106° F	-10° F	140° F
AT-5	Thermal Plate Temp 3	43	-50° F	210° F	13° F	103° F	-10° F	140° F
AT-6	Thermal Plate Temp 4	58	-50° F	210° F	27° F	117° F	-10° F	145° F
AT-7	Thermal Plate Temp 5	71	-50° F	210° F	22° F	109° F	-10° F	140° F
AT-8	Vertical Structure 1 Temp	59	-300° F	300° F	-210° F	200° F	-350° F	304° F
AT-9	Vertical Structure 2 Temp	87	-300° F	300° F	-210° F	200° F	-350° F	304° F
AT-10	Bottom Structure Temp	15	-300° F	300° F	-210° F	160° F	-350° F	304° F
AT-11	PDM Temp	88	-300° F	300° F	-215° F	270° F	-350° F	304° F
AT-12	Thermal Bag Inner Temp	60	-300° F	300° F	-12° F	115° F	-350° F	304° F
AT-13	Thermal Bag Outer Temp	72	-300° F	300° F	-160° F	150° F	-350° F	304° F
AT-14	Front Structure Temp	46	-300° F	300° F	-210° F	180° F	-350° F	304° F
AT-15	Rear Structure Temp	47	-300° F	300° F	-210° F	200° F	-350° F	304° F
	ELECTRONIC TEMPERATURES							
AT-23	Transmitter A Pwr Amplifier Temp	18	-50° F	200° F	10° F	135° F	-10° F	158° F
AT-24	Transmitter A Case Temp	19	-50° F	200° F	10° F	135° F	-10° F	158° F
AT-25	Transmitter B Pwr Amplifier Temp	31	-50° F	200° F	10° F	135° F	-10° F	158° F
AT-26	Transmitter B Case Temp	32	-50° F	200° F	10° F	135° F	-10° F	158° F
AT-27	Data Processor Base Temp	33	-50° F	210° F	0° F	125° F	-10° F	158° F
AT-28	Data Processor Internal Temp	34	-50° F	210° F	0° F	150° F	-10° F	170° F
AT-31	Decoder B Demodulator Temp	48	-50° F	210° F	0° F	125° F	-10° F	158° F
AT-32	Decoder A Demodulator Temp	49	-50° F	210° F	0° F	125° F	-10° F	160° F
AT-34	PDU 1 Temp	62	-25° F	210° F	0° F	130° F	-10° F	158° F
AT-35	PDU 2 Temp	63	-25° F	210° F	35° F	155° F	-10° F	160° F
AT-38	PCU Regulator 1 Temp	77	-25° F	210° F	10° F	180° F	-10° F	190° F
AT-39	PCU Regulator 2 Temp	78	-25° F	210° F	10° F	180° F	-10° F	190° F
AT-40	RCVR Case Temp (Uplink A only)	16	-50° F	200° F	28° F	130° F	-10° F	130° F
AT-41	APM 1 Temp	61	-25° F	210° F	39° F	109° F	-22° F	158° F
AT-42	APM 2 Temp	64	-25° F	210° F	39° F	109° F	-22° F	150° F
AP-01	LSP Electronics Temp	25	-50° F	210° F	33° F	138° F	-10° F	158° F

TABLE 6-VIII.- ANALOG CHANNEL USAGE - Continued

SYMBOL	LOCATION/NAME	CHANNEL	TRANSDUCER RANGE		NOMINAL OPERATING LIMITS		REDLINE LIMITS (IF APPLICABLE)	
			LOW	HIGH	LOW	HIGH	LOW	HIGH
	CENTRAL STATION ELECTRICAL							
AE-1	0.25 Vdc Calibration	2	0 Vdc	5 Vdc	0.24 V	0.26 V	0.22 V	0.28 V
AE-2	4.75 Vdc Calibration	3	0 Vdc	5 Vdc	4.72 V	4.78 V	4.70 V	4.80 V
AE-3	PCU 1 Input Voltage	8	0 Vdc	17 Vdc	15.8 V	16.2 V	15.0 V	16.9 V
AE-4	PCU Input Current	5	0 Adc	5 Adc	3.9 Adc	4.3 Adc	0.9 Adc	5.2 Adc
AE-7	PCU Output Voltage 1 (+29V)	20	0 Vdc	35 Vdc	28.0 V	30.0 V	27.5 V	30.5 V
AE-9	PCU Output Voltage 2 (+12V)	50	0 Vdc	15 Vdc	11.75 V	12.25 V	11.0 V	13.0 V
AE-10	PCU Output Voltage 3 (+5V)	65	0 Vdc	6 Vdc	4.8 V	5.4 V	4.0 V	5.8 V
AE-11	PCU Output Voltage 4 (-12V)	79	-15 Vdc	-9 Vdc	-12.75 V	-11.9 V	-12.9 V	-11.8 V
AE-15	Xmtr A 17-volt Reg Current	51	0 mAdc	60 mAdc	20 mA	45 mA	1.1 mA	65.4 mA
AE-16	Xmtr B 17-volt Reg Current	66	0 mAdc	60 mAdc	20 mA	45 mA	2.1 mA	64.7 mA
AE-17	Xmtr A 23-volt Reg Output	81	0 v	46 v	22.75 V	23.25 V	.36 V	25.2 V
AE-18	Xmtr B 23-volt Reg Output	22	0 v	46 v	22.75 V	23.25 V	.36 V	25.2 V
AE-19	Rcvr A Input Signal Level	21	-100 dBm	-60 dBm	-92 dBm	-74 dBm	-100 dBm	-60 dBm
AE-20	Rcvr B Input Signal Level	36	-100 dBm	-60 dBm	-92 dBm	-74 dBm	-100 dBm	-60 dBm
AE-21	APM 1 Current	35	0 Adc	2 Adc			0.02 Adc	1.77 Adc
AE-22	APM 2 Current	56	0 Adc	2 Adc			0.02 Adc	1.77 Adc
AE-23	PCU 2 Input Voltage	11	0 Vdc	17 Vdc	15.8 V	16.4 V		
AE-24	Reserve Current	30	0 Adc	4 Adc	0.3 Adc	2.7 Adc	0.15 Adc	3.64 Adc
	RTG TEMPERATURES							
AR-1	Hot Frame 1 Temp	6	1000° F	1200° F	1060° F	1135° F	959° F	1138° F
AR-2	Hot Frame 2 Temp	37	1000° F	1200° F	1060° F	1135° F	956° F	1138° F
AR-3	Hot Frame 3 Temp	52	1000° F	1200° F	1060° F	H	961° F	1142° F
AR-4	Cold Frame 1 Temp	7	350° F	550° F	----	----	INOPERATIVE	
AR-5	Cold Frame 2 Temp	67	350° F	550° F	L	460° F	402° F	585° F
AR-6	Cold Frame 3 Temp	82	350° F	550° F	405° F	500° F	INTERMITTENT	

TABLE 6-VIII.- ANALOG CHANNEL USAGE.- Continued

SYMBOL	LOCATION/NAME	CHANNEL	
	CENTRAL STATION DISCRETES		
AB-4	Pwr Distribution Status Experiments 1 & 2	12	

Exper #1	Exper #2	Octal Count
Off	Off	000 to 002
Standby	Off	015 to 021
On	Off	034 to 041
Off	Standby	075 to 106
Standby	Standby	111 to 121
On	Standby	126 to 137
Off	On	166 to 203
Standby	On	204 to 220
On	On	221 to 237

AB-5 Pwr Distribution Status Experiments 3 & 4 — 14

Exper #3	Exper #4	Octal Count
Off	Off	000 to 002
Standby	Off	015 to 021
On	Off	034 to 060
Off	Standby	075 to 106
Standby	Standby	111 to 121
On	Standby	126 to 156
Off	On	166 to 203
Standby	On	204 to 217
On	On	220 to 255

AB-6 Uplink A/B and Power Routing Status — 26

Uplink	Octal Count	Power Routing Relay Position W	Power Routing Relay Position X
A	035 to 056	PC #2	PC #1
	057 to 101	PC #1	PC #2
B	000 to 002	PC #2	PC #1
	025 to 033	PC #1	PC #2

AB-8 Receiver A Command Subcarrier Status — 9

	Octal Count
No Modulation	000 to 075
Modulation Present	243 to 365

AB-9 Receiver B Command Subcarrier Status — 17

	Octal Count
No Modulation	000 to 075
Modulation Present	243 to 365

TABLE 6-VIII.- ANALOG CHANNEL USAGE.- Continued

SYMBOL	LOCATION/NAME	CHANNEL	
AB-10	DDP X/Y STATUS	70	
			DDP X ON — Octal Count: 160 to 220
			DDP Y ON — Octal Count: 000 to 025
AB-11	Pwr Distribution Status Experiment 5 - LSP	73	Exper #5 — Octal Count: Off: 000 to 002; Standby: 016 to 021; On: 034 to 042
AB-13	APM STATUS	76	
			APM ON — Octal Count: 330 to 375
			APM OFF — Octal Count: 000 to 325
AB-14	Pwr Dumps 1 and 2 Status	80	PD#1 / PD#2 — Octal Count: Off / Off: 000 to 007; On / Off: 065 to 107; Off / On: 164 to 213; On / On: 255 to 305
AB-15	Periodic Commands Enable/Inhibit Status	86	
			Inhibit — Octal Count: 000 to 025
			Enable — Octal Count: 173 to 377
AB-16	PC Autoswitch Status	13	
			Auto Select PC#1 — Octal Count: 147 to 177
			Auto Select PC#2 — Octal Count: 313 to 377
AB-17	ADP X/Y and Power Routing Status	90	

ADP	Octal Count	Power Routing Relay Position W	Power Routing Relay Position X
X	035 to 056	PC #2	PC #1
	057 to 101	PC #1	PC #2
Y	000 to 002	PC #2	PC #1
	025 to 033	PC #1	PC #2

AB-18	Uplink Switch Delay Status	1	
			Next Automatic Switch-over Enabled — Octal Count: 000 to 025
			Next Automatic Switch-over Inhibited — 173 to 377

TABLE 6-VIII.- ANALOG CHANNEL USAGE - Continued

SYMBOL	LOCATION/NAME	CHANNEL	NOMINAL OPERATING LIMITS
	HEAT FLOW		
AH-1	Supply Voltage 1 (5 v)	29	4.9 to 5.1 Vdc
AH-2	Supply Voltage 2 (-5 v)	45	-5.1 to -4.9 Vdc
AH-3	Supply Voltage 3 (15 v)	55	14.7 to 15.3 Vdc
AH-4	Supply Voltage 4 (-15 v)	74	-15.3 to -14.7 Vdc
AH-6	High Conductivity Htr Pwr Status	57	Discrete
AH-7	Low Conductivity Htr Pwr Status	75	Discrete
	LUNAR SURFACE GRAVIMETER		
AG-1	Tide Signal	10	
AG-2	Free Mode Oscillation Signal	23	
AG-3	Seismic Signal	39	
AG-4	Heater Box Temp	68	
AG-5	Instrument Housing Pressure	89	5 to 20 Torr
AG-6	Mass Changing Error Signal	54	
AG-7	Oscillator Amplitude	24	1.000 to 3.500 v
AG-8	Power Converter (15 v)	38	14.75 to 15.25 Vdc
AG-9	Power Converter (-15 v)	53	-15.25 to -14.75 Vdc
AG-10	Power Converter (5 v)	69	4.75 to 5.25 Vdc
	LUNAR EJECTA AND METEORITES		
AJ-1	+5 Volt Supply	83	4.30 to 4.70 Vdc
AJ-2	Sensor Dust Cover Status	83	Discrete
AJ-3	Mirror Dust Cover Status	83	Discrete
AJ-4	Power Supply Monitor	83	0.50 to 0.90 Vdc
AJ-5	Bias Voltage Monitor	83	0.30 to 0.50 v
AJ-6	Up Microphone Temp	84	-10° F to 150° F
AJ-7	East Microphone Temp	84	-10° F to 150° F
AJ-8	West Microphone Temp	84	-10° F to 150° F
AJ-9	Central Electronics Temp	84	-10° F to 150° F
AJ-10	-5 Volt Supply	84	-4.7 to -4.3 Vdc
AJ-11	Survival Temp	85	-50° F to 210° F
	LUNAR SEISMIC PROFILING		
AP-1	Electronics Internal Temp	25	+33° F to 138° F

P-1

TABLE 6-VIII.- ANALOG CHANNEL USAGE - Concluded

SYMBOL	LOCATION/NAME	CHANNEL	NOMINAL OPERATING LIMITS
	LUNAR MASS SPECTROMETER		
AM-1	Marker ID	40	
AM-2	Experiment Current Monitor	40	
AM-3	Ion Pump Voltage	40	
AM-4	Ion Pump Voltage	40	
AM-5	Baseplate Temp	40	
AM-6	Ion Source Temp	40	
AM-7	+12 v Supply Voltage	40	11.90 to 12.10 Vdc
AM-8	+5 v Supply Voltage	40	4.75 to 5.25 Vdc
AM-9	-12 v Supply Voltage	40	-12.10 to -11.90 Vdc
AM-10	-15 v Supply Voltage	40	-15.25 to -14.75 Vdc
AM-11	Emission Current Monitor	40	
AM-12	Filament 1 Current Monitor	40	
AM-13	Filament 2 Current Monitor	40	
AM-14	Multiplier High Voltage Monitor	40	
AM-15	Low Voltage Pwr Supply Temp	40	
AM-41	Electronics Temp	41	-50° F to 200° F
AM-44	Sweep High Voltage	44	

TABLE 6-IX.- LMS MEASUREMENTS

Scientific Measurements

Symbol	Location/Measurement	ALSEP Word	Frame	(Dynamic) Range	Sensor Accuracy
DM-3	Low Mass (A) Range	17	Every	2 Million Counts Per Second	10^{-5} Amp/Torr
DM-4	Intermediate Mass (B) Range	19	Every	2 Million Counts Per Second	10^{-5} Amp/Torr
DM-5	High Mass (C) Range	21	Every	2 Million Counts Per Second	10^{-5} Amp/Torr

P-1

LMS Data Format for ALSEP Words #17, 19, and 21 :

ALSEP Bit Position	1	2	3	4	5	6	7	8	9	10
Shift Register and Shift Counter Bit Positions	20th	19th	18th	17th	16th	15th	2^3	2^2	2^1	2^0
Transmitted Data	Six Bits of Scientific Data in Shift Register						Four Bits From Shift Counter			

*

TABLE 6-IX.- LMS MEASUREMENTS - Continued

Measurements that Appear in ALSEP Word 5
Odd-Numbered Main Frames

Meas No.	Measurement	Meaning When	
		Bit is 1	Bit is 0
DM-11	Mode Identification Bit, MSB		Odd Frame
DM-01	Command Line #1 (Bit 1)	Entry	No Entry
	Command Line #2 (Bit 2)	Entry	No Entry
	Command Line #3 (Bit 3)	Entry	No Entry
	Command Line #4 (Bit 4)	Entry	No Entry
	Command Line #5 (Bit 5)	Entry	No Entry
	Command Line #6 (Bit 6)	Entry	No Entry

Experiment Measurements that Appear in ALSEP Word 5 P-1
Even-Numbered Main Frames

Meas No.	Measurement	Meaning When	
		Bit is 1	Bit is 0
DM-11	Mode Identification Bit, MSB	Even Frame	
DM-12	Multiplier Voltage	High	Low
DM-13	Discriminator Level	High	Low
DM-14	Start of Sweep	Sweep	Background
DM-15	Step (Auto.)-Lock (Manual)	Step	Lock
DM-16	Ion Pump	ON	OFF
DM-17	Dust Cover	Removed	In Place
DM-18	Bake Out Heater	ON	OFF
DM-19	Multiplier & Sweep High Voltage	ON	OFF
DM-20	Filament Flag	ON	OFF

*

TABLE 6-IX.- LMS MEASUREMENTS - Continued

Engineering Measurements

16 functions of LMS Engineering Measurements are submultiplexed into ALSEP word 33, channel 40. One measurement is read out on channel 40 during each 90-frame sequence.

Symbol	Sub-Multiplexed Sequence	Measurement	Operating Range
AM-1	1	Marker ID (Eight 1's)	OCTAL 377
AM-2	2	Experiment Current Monitor	230 to 430 mA
AM-3	3	Ion Pump Current	0.01 to 30 μA
AM-4	4	Ion Pump Voltage	3000 to 3700 Volts
AM-5	5	Baseplate Temperature	-160 to 150° C
AM-6	6	Ion Source Temperature	-60 to 280° C
AM-7	7	+12 VDC Supply Voltage	12.0 ± 0.1 Volts
AM-8	8	+5 VDC Supply Voltage	5.0 ± 0.4 Volts
AM-9	9	-12 VDC Supply Voltage	-12.0 ± 0.1 Volts
AM-10	10	-15 VDC Supply Voltage	-15.0 ± 0.1 Volts
AM-11	11	Emission Current Monitor	100 to 250 μA
AM-12	12	Filament #1 Current Monitor	1.2 to 1.7 Amps
AM-13	13	Filament #2 Current Monitor	1.2 to 1.7 Amps
AM-14	14	Multiplier High Voltage Monitor	0, -2400, or -3000 V
AM-15	15	Low Voltage Power Supply Temperature	-5 to 140° F
AM-16	16	Spare	OCTAL 0 to 6

*

TABLE 6-IX.- LMS MEASUREMENTS - Concluded

2 Channels of Engineering Measurements are included in ALSEP Word 33

Symbol	Location/Measurement	Analog Channel	Sensor Range
AM-41	LMS Electronics Temp	41	-40 to 130° F
AM-44	LMS Sweep High Voltage	44	0, 320, 1420 Volts

LEAM Word	ALSEP Word	MSB					LEAM Bit Position				LSB
		1	2	3	4	5	6	7	8	9	10
1	31	DJ--1				DJ-2			DJ-3		
2	39	DJ--4				DJ-5			DJ-6		
3	31	DJ--7				DJ-8			DJ-9		
4	39	DJ--10				DJ--11					
5	31	DJ-12				DJ-13			DJ-14		
6	39	DJ--15				DJ-16			DJ-17		
7	31	DJ--18				DJ-19			DJ-20		
8	39	DJ--21				DJ--22					
9	31	DJ--23		DJ--24		DJ-25			DJ-26		
10	39	DJ--27		DJ-28	DJ-29	DJ-30			DJ-31		

Figure 6-3.- LEAM transmitted word format.

TABLE 6-X.- LEAM MEASUREMENTS

Scientific Measurements

The following measurements are sequenced in ALSEP Word 31 and 39 for five consecutive main frames. The sequence is repeated for eighteen times during each set of 90 main frames.

Symbol	Measurement	Location	LEAM Word	ALSEP Word	ALSEP Main Frame	Assigned Bits
DJ-1	Front Film ID	UP	1	31	1, 6, 11, etc.	1-4
DJ-2	Front Film PHA (Pulse Height Analysis)	Dual				5-7
DJ-3	Front Film Accumulator	Sensor				8-10
DJ-4	Rear Film ID	Assembly	2	39	1, 6, 11, etc.	1-4
DJ-5	Rear Film PHA					5-7
DJ-6	Rear Film Accumulator					8-10
DJ-7	Front Collector ID		3	31	2, 7, 12, etc.	1-4
DJ-8	Microphone PHA					5-7
DJ-9	Microphone Accumulator					8-10
DJ-10	Rear Collector ID		4	39	2, 7, 12, etc.	1-4
DJ-11	Elapsed Time					5-10
DJ-12	Front Film ID	EAST	5	31	3, 8, 13, etc.	1-4
DJ-13	Front Film PHA	Dual				5-7
DJ-14	Front Film Accumulator	Sensor				8-10
DJ-15	Rear Film ID	Assembly	6	39	3, 8, 13, etc.	1-4
DJ-16	Rear Film PHA					5-7
DJ-17	Rear Film Accumulator					8-10
DJ-18	Front Collector ID		7	31	4, 9, 14, etc.	1-4
DJ-19	Microphone PHA					5-7
DJ-20	Microphone Accumulator					8-10
DJ-21	Rear Collector ID		8	39	4, 9, 14, etc.	1-4
DJ-22	Elapsed Time					5-10
DJ-23	Film ID	WEST	9	31	5, 10, 15, etc.	1-2
DJ-24	Collector ID	Single				3-4
DJ-25	Film PHA	Sensor				5-7
DJ-26	Film Accumulator	Assembly				8-10
DJ-27	Secondary Microphone Accumulator		10	39	5, 10, 15, etc.	1-2
DJ-28	Analog Data Synchronization ID Bit					3
DJ-29	Heater Status					4
DJ-30	Main Microphone PHA					5-7
DJ-31	Main Microphone Accumulator					8-10

TABLE 6-X.- LEAM MEASUREMENTS (Concluded)

Engineering Measurements

Symbol	Measurement	ALSEP Word 33 Channel	Range	
AJ-1	LEAM +5 V Supply	83-01	5.0 ± 1.0 Volts	
AJ-2	LEAM Sensor Dust Cover Status	83-02	Octal 234 - 321 (Squibs Not Fired) 000 - 013 (Squibs Fired)	P-1
AJ-3	LEAM Mirror Dust Cover Status	83-03	Octal 234 - 321 (Squibs Not Fired) 000 - 013 (Squibs Fired)	
AJ-4	LEAM Power Supply Monitor	83-04	0.7 ± 0.2 V	
AJ-5	LEAM Bias Voltage Monitor	83-05	0.4 ± 0.2 V	
AJ-6	LEAM Up Microphone Temperature	84-01	-20° F to +150° F	
AJ-7	LEAM East Microphone Temperature	84-02	-20° F to +150° F	
AJ-8	LEAM West Microphone Temperature	84-03	-20° F to +150° F	
AJ-9	LEAM Central Electronics Temperature	84-04	-20° F to +150° F	
AJ-10	LEAM -5 V Supply	84-05	-5.0 ± 1.0 Volts	P-1
AJ-11	LEAM Survival Temperature	85	-50° F to +210° F	

Heat Flow Word	Bit Position										ALSEP Frames
	1	2	3	4	5	6	7	8	9	10	
0	R_2	R_1	0	P_4	P_3	P_2	P_1	2^{12}	2^{11}	2^{10}	0
	2^9	2^8	2^7	2^6	2^5	2^4	2^3	2^2	2^1	2^0	1
1	R_2	R_1	M_1	M_2	M_3	0	0	2^{12}	2^{11}	2^{10}	2
	2^9	2^8	2^7	2^6	2^5	2^4	2^3	2^2	2^1	2^0	3
2	R_2	R_1	H_4	H_3	H_2	H_1	0	2^{12}	2^{11}	2^{10}	4
	2^9	2^8	2^7	2^6	2^5	2^4	2^3	2^2	2^1	2^0	5
3	R_2	R_1	0	0	0	0	0	2^{12}	2^{11}	2^{10}	6
	2^9	2^8	2^7	2^6	2^5	2^4	2^3	2^2	2^1	2^0	7

Notes:

1. It takes two ALSEP main frames to downlink one heat flow word. It takes four heat flow words to obtain one measurement except in Thermocouple Group Probe 1 and 2. In Thermocouple Group Probe 1 and 2 each heat flow word contains a single measurement.
2. Measurement DH-90: M_1, M_2, and M_3 identifies mode.
3. Measurement DH-91: P_4, P_3, P_2 and P_1 are measurement identification in gradient mode and low conductivity mode. | P-1
4. Measurement DH-92: R_2 and R_1 are the binary equivalent of heat flow word and identify the analog parameters (13-bits) that are used in the calculation to derive the engineering units for a measurement number.
5. Measurement DH-93: H_4, H_3, H_2, and H_1 identify the conductivity heater status. In the high conductivity mode it identifies the measurement numbers also.
6. Measurement DH-94: Filler bits (shown as zeros in above chart).

Figure 6-4.- HFE word format.

TABLE 6-XI.- HFE MEASUREMENTS, MODE 1 AND 2 GRADIENT AND LOW CONDUCTIVITY

SYMBOL	LOCATION/MEASUREMENT	FRAME	RANGE
DH-1	ΔT11 H Temp Grad High Sens	0-7	±2°C
DH-2	ΔT12 H Temp Grad High Sens	8-15	±2°C
DH-3	ΔT21 H Temp Grad High Sens	90-97	±2°C
DH-4	ΔT22 H Temp Grad High Sens	98-105	±2°C
DH-5	ΔT11 L Temp Grad Low Sens	180-187	±20°C
DH-6	ΔT12 L Temp Grad Low Sens	188-195	±20°C
DH-7	ΔT21 L Temp Grad Low Sens	270-277	±20°C
DH-8	ΔT22 L Temp Grad Low Sens	278-285	±20°C
DH-9	T11 Probe, Ambient Temp	360-367	200 to 250°K
DH-10	T12 Probe, Ambient Temp	368-375	200 to 250°K
DH-11	T21 Probe, Ambient Temp	450-457	200 to 250°K
DH-12	T22 Probe, Ambient Temp	458-465	200 to 250°K
DH-13	Ref T_1, Temp Ref Junction	540-547	-20 to +60°C
DH-14, 24, 34, 44	TC_1 Group Probe Cable Temp	548-555	90 to 350°K
DH-15	Ref T_2, Temp Ref Junction	630-637	-20 to +60°C
DH-16, 26, 36, 46	TC_2 Group Probe Cable Temp	638-645	90 to 350°K

TABLE 6-XII.- HFE MEASUREMENTS, MODE 3, HIGH CONDUCTIVITY

SYMBOL	LOCATION/MEASUREMENT	FRAME	RANGE	H-BITS	PROBE	BRIDGE	HEATER STATUS
DH-50	Differential Temp	0-7		0000	1	1	Off
DH-51	Ambient Temp	8-15		0000	1	1	Off
DH-52	Differential Temp	0-7		0001	1	1	H_{12} On
DH-53	Ambient Temp	8-15		0001	1	1	H_{12} On
DH-60	Differential Temp	0-7		0010	1	2	Off
DH-61	Ambient Temp	8-15		0010	1	2	Off
DH-62	Differential Temp	0-7		0011	1	2	H_{14} On
DH-63	Ambient Temp	8-15		0011	1	2	H_{14} On
DH-56	Differential Temp	0-7		0100	1	1	Off
DH-57	Ambient Temp	8-15		0100	1	1	Off
DH-58	Differential Temp	0-7		0101	1	1	H_{11} On
DH-59	Ambient Temp	8-15		0101	1	1	H_{11} On
DH-66	Differential Temp	0-7		0110	1	2	Off
DH-67	Ambient Temp	8-15		0110	1	2	Off
DH-68	Differential Temp	0-7		0111	1	2	H_{13} On
DH-69	Ambient Temp	8-15		0111	1	2	H_{13} On
DH-70	Differential Temp	0-7		1000	2	1	Off
DH-71	Ambient Temp	8-15		1000	2	1	Off
DH-72	Differential Temp	0-7		1001	2	1	H_{22} On
DH-73	Ambient Temp	8-15		1001	2	1	H_{22} On
DH-80	Differential Temp	0-7		1010	2	2	Off
DH-81	Ambient Temp	8-15		1010	2	2	Off
DH-82	Differential Temp	0-7		1011	2	2	H_{24} On
DH-83	Ambient Temp	8-15		1011	2	2	H_{24} On
DH-76	Differential Temp	0-7		1100	2	1	Off
DH-77	Ambient Temp	8-15		1100	2	1	Off
DH-78	Differential Temp	0-7		1101	2	1	H_{21} On
DH-79	Ambient Temp	8-15		1101	2	1	H_{21} On
DH-86	Differential Temp	0-7		1110	2	2	Off
DH-87	Ambient Temp	8-15		1110	2	2	Off
DH-88	Differential Temp	0-7		1111	2	2	H_{23} On
DH-89	Ambient Temp	8-15		1111	2	2	H_{23} On

TABLE 6-XIII.- HFE MEASUREMENTS, ANALOG

SYMBOL	LOCATION/MEASUREMENT	CHANNEL	RANGE	DECIMAL PCM
AH-1	Supply Voltage #1	29	0 to +5 Volts	
AH-2	Supply Voltage #2	45	0 to -5 Volts	
AH-3	Supply Voltage #2	55	0 to +15 Volts	
AH-4	Supply Voltage #4	74	0 to -15 Volts	
AH-5	Not Assigned			
AH-6	Low Cond Heater Power Status	57	2 to 2.5 Volts On otherwise Off	102-128 Htr On 3-101 Htr Off
AH-7	High Cond Heater Power Status	75	2 to 2.5 Volts On otherwise Off	102-128 Htr On 3-101 Htr Off

P-1

LSP Subframe	LSP Word	LSP BIT POSITION 1–10	11–15	16–20	21–25	26–29	30
1	1	DP-17	DP-1	DP-6	DP-11	DP-16	
"	2	DP-1	DP-6	DP-11	DP-16	DP-18	DP-19
"	3	"	"	"	"	DP-20	
"	4	"	"	"	"	DP-2	
"	5	"	"	"	"	"	
"	6	"	"	"	"	"	
"	7	"	"	"	"	"	
"	8	"	"	"	"	DP-3	
"	9	"	"	"	"	"	
"	10	"	"	"	"	"	
"	11	"	"	"	"	"	
"	12	"	"	"	"	AE-24	P-1
"	13	"	"	"	"	"	
"	14	"	"	"	"	"	
"	15	"	"	"	"	"	
"	16	"	"	"	"	DP-5	
"	17	"	"	"	"	"	
"	18	"	"	"	"	"	
"	19	"	"	"	"	"	
"	20	"	"	"	"	DP-21	
2	1	DP-17	DP-1	DP-6	DP-11	DP-16	
"	2	DP-1	DP-6	DP-11	DP-16	DP-18	DP-19
"	3	"	"	"	"	SPARE	
"	4	"	"	"	"	AE-3	
"	5	"	"	"	"	"	
"	6	"	"	"	"	"	
"	7	"	"	"	"	"	
"	8	"	"	"	"	AT-16	
"	9	"	"	"	"	"	
"	10	"	"	"	"	"	
"	11	"	"	"	"	"	
"	12	"	"	"	"	DP-10	
"	13	"	"	"	"	"	
"	14	"	"	"	"	"	
"	15	"	"	"	"	"	
"	16	"	"	"	"	AE-4	
"	17	"	"	"	"	"	
"	18	"	"	"	"	"	
"	19	"	"	"	"	"	
"	20	"	"	"	"	DP-21	
3	1	DP-17	DP-1	DP-6	DP-11	DP-16	
"	2	DP-1	DP-6	DP-11	DP-16	DP-18	DP-19
"	3	"	"	"	"	SPARE	
"	4	"	"	"	"	AB-4	
"	5	"	"	"	"	"	
"	6	"	"	"	"	"	
"	7	"	"	"	"	"	
"	8	"	"	"	"	DP-14	
"	9	"	"	"	"	"	
"	10	"	"	"	"	"	
"	11	"	"	"	"	"	
"	12	"	"	"	"	SPARE	
"	13	"	"	"	"	"	
"	14	"	"	"	"	"	
"	15	"	"	"	"	"	
"	16	"	"	"	"	AB-5	
"	17	"	"	"	"	"	
"	18	"	"	"	"	"	
"	19	"	"	"	"	"	
"	20	"	"	"	"	DP-21	

Notes

30 LSP bit = 1 LSP word
20 LSP words = 1 LSP subframe
3 subframes = 1 LSP frame

When the LSP transmitter is commanded to "RF Fire Pulse ON", item DP-20 (RF Fire Pulses Status) will be 11 in LSP Subframe 1 in only one subframe out of 174 subframes (29.55 seconds) which is coincident with the actual RF transmitter pulse train.

Figure 6-5.- LSP transmitted word format.

TABLE 6-XIV. - LSP MEASUREMENTS

Symbol	Measurement	LSP Word	LSP Bits	LSP Sub Frame	Transmitted Data
DP-17	LSP Frame Synchronization**	1	1-10	1,2,3	Modified Barker Code
DP-1 *	Geophone No. 1	1	11-15	"	$2^7,2^6,2^5,2^4,2^3$
DP-1 *	Geophone No. 1	2-20	1-7	"	$2^7,2^6,2^5,2^4,2^3,2^2,2^1$
DP-6 *	Geophone No. 2	1	16-20	"	2^7 thru 2^3
DP-6 *	Geophone No. 2	2-20	8-14	"	2^7 thru 2^1
DP-11*	Geophone No. 3	1	21-25	"	2^7 thru 2^3
DP-11*	Geophone No. 3	2-20	15-21	"	2^7 thru 2^1
DP-16*	Geophone No. 4	1	26-30	"	2^7 thru 2^3
DP-16*	Geophone No. 4	2-20	22-28	"	2^7 thru 2^1
DP-18	Geophone Calibration Pulse Status	2	29	1,2,3	0 = OFF; 1 = ON
DP-19	Geophone Amplifier Gain Status	2	30	1,2,3	1 = Normal; 0 = Low
DP-20	RF Fire Pulses Status	3	29,30	1	00 = OFF 11 = RF Fire Pulses ON
		3	29,30	2,3	Not Used (Spare) 00 Will be Filler Bits
DP-2	LSP MUX A/D Calibration Reference Voltage No. 1	4	29,30	1	$2^7,2^6$
		5	29,30		$2^5,2^4$
		6	29,30		$2^3,2^2$
		7	29,30		$2^1,2^0$

P-1

* Science Data Format

** LSP Sync Pattern is 0000111011

TABLE 6-XIV.- LSP MEASUREMENTS - Continued

Symbol	Measurement	LSP Word	LSP Bits	LSP Sub Frame	Transmitted Data	
DP-3	LSP DC/DC Converter Voltage Output	8	29,30	1	$2^7,2^6$	
		9	29,30		$2^5,2^4$	
		10	29,30		$2^3,2^2$	
		11	29,30		$2^1,2^0$	
AE-24	ALSEP C/S Reserve Current	12	29,30	1	$2^7,2^6$	P-1
		13	29,30		$2^5,2^4$	
		14	29,30		$2^3,2^2$	
		15	29,30		$2^1,2^0$	
DP-5	LSP MUX A/D Calibration Reference Voltage No. 2	16	29,30	1	$2^7,2^6$	
		17	29,30		$2^5,2^4$	
		18	29,30		$2^3,2^2$	
		19	29,30		$2^1,2^0$	
DP-21	LSP Subframe Identification Bits	20	29,30	1	11 = LSP Subframe No. 1	
			29,30	2	01 = LSP Subframe No. 2	
			29,30	3	10 = LSP Subframe No. 3	
AE-3	ALSEP C/S PC No. 1 Input Voltage.	4	29,30	2	$2^7,2^6$	
		5	29,30		$2^5,2^4$	
	(PC No. 2. Input Voltage is not monitored via LSPE MUX)	6	29,30		$2^3,2^2$	
		7	29,30		$2^1,2^0$	
AT-16	ALSEP C/S Thermal Plate No. 6 Temperature (AT-16 is next to AT-4)	8	29,30	2	$2^7,2^6$	P-1
		9	29,30		$2^5,2^4$	
		10	29,30		$2^3,2^2$	
		11	29,30		$2^1,2^0$	

TABLE 6-XIV.- LSP MEASUREMENTS - Concluded

Symbol	Measurements	LSP Word	SLP Bits	LSP Sub Frame	Transmitted Data
DP-10	Geophone Calibration Pulse Amplitude	12	29,30	2	$2^7,2^6$
		13	29,30		$2^5,2^4$
		14	29,30		$2^3,2^2$
		15	29,30		$2^1,2^0$
AE-4	ALSEP C/S PCU Input Current	16	29,30	2	$2^7,2^6$
		17	29,30		$2^5,2^4$
		18	29,30		$2^3,2^2$
		19	29,30		$2^1,2^0$
AB-4	ALSEP C/S Experiments No. 1 and No. 2 Power Status	4	29,30	3	$2^7,2^6$
		5	29,30		$2^5,2^4$
		6	29,30		$2^3,2^2$
		7	29,30		$2^1,2^0$
DP-14	LSP Temperature Monitor	8	29,30	3	$2^7,2^6$
		9	29,30		$2^5,2^4$
		10	29,30		$2^3,2^2$
		11	29,30		$2^1,2^0$
Spare	ALSEP C/S Analog (Spare) (Grounded - reads octal 001)	12	29,30	3	$2^7,2^6$
		13	29,30		$2^5,2^4$
		14	29,30		$2^3,2^2$
		15	29,30		$2^1,2^0$
AB-5	ALSEP C/S Experiments No. 3 and No. 4 Power Status	16	29,30	3	$2^7,2^6$
		17	29,30		$2^5,2^4$
		18	29,30		$2^3,2^2$
		19	29,30		$2^1,2^0$

P-1

TABLE 6-XV.- LSG MEASUREMENTS
(36-WORD LSG MAIN FRAME)

Scientific Measurements:

Symbol	Measurement	ALSEP Word	Frame	Dynamic Range	Sensor Accuracy	Words/ Frame
DG-1	Seismic	Even No.*	Every	0.0001 to 0.1 Micron	±0.0001 Micron	31
DG-2	Tide	25	Every	0 to 2000μ gals	±2.0μ gals	1
DG-3	Free Mode	27	Every	0.004 to 4μ gals	±0.004μ gal(rms)	1
DG-4	Sensor Temperature	29	Every	50° C ± 2° C	±0.002° C	1

P-1

*Every even-numbered word except #2.

LSG Data Format for DG-1 through DG-4

Bit Position	1	2	3	4	5	6	7	8	9	10
Binary	2^9	2^8	2^7	2^6	2^5	2^4	2^3	2^2	2^1	2^0
Transmitted Data	(MSB)			Ten Bits of Scientific Data						(LSB)

*

TABLE 6-XV.- LSG MEASUREMENTS - Continued

LSG Experiment Operate Status

ALSEP Word No. 35

Meas. No.	Measurement	Meaning When Bit is 1	Meaning When Bit is 0
DG-11	Temperature Relay #1 (Bit 1)	Selected	Not Selected
	Temperature Relay #2 (Bit 2)	Selected	Not Selected
	Temperature Relay #3 (Bit 3)	Selected	Not Selected
	Temperature Relay #4 (Bit 4)	Selected	Not Selected
	Temperature Relay #5 (Bit 5)	Selected	Not Selected
	Temperature Relay #6 (Bit 6)	Selected	Not Selected
DG-12	Mass Change Motor	ON	OFF
DG-13	Coarse/Fine Screw Servo Motor Status*		
DG-14	Tilt Servo Motor	ON	OFF

* DG-13

Bit I	Bit 2	Function
0	0	OFF
0	1	OFF
1	0	NOT SLEWING
1	1	SLEWING

LSG Command Register Status

ALSEP Word No. 37

P-1

Meas. No.	Measurement	Meaning When Bit is 1	Meaning When Bit is 0
DG-15	Command Decoder Power	ON	OFF
DG-16	Instrument Housing Heater Power	ON	OFF
DG-17	Pressure Transducer Monitor	ON	OFF
DG-18	Seismic High Gain Mode	High	Low
DG-19	Not Used - Spare (Bit 1)	Filler Bit	
	Command Counter, 2^4 Bit* (Bit 2)	ON	OFF
	Command Counter, 2^3 Bit (Bit 3)	ON	OFF
	Command Counter, 2^2 Bit (Bit 4)	ON	OFF
	Command Counter, 2^1 Bit (Bit 5)	ON	OFF
	Command Counter, 2^0 Bit (Bit 6)	ON	OFF

*The 5-Stage Command Counter Bits refer to the set of 30 LSG commands obtained via the UP, DOWN, and EXECUTE Commands (Octal commands 72, 74, and 67 respectively). When the LSG Command Decoder is powered OFF, these five bits are indeterminate (but probably all 1's).

TABLE 6-XV.- LSG MEASUREMENTS - Concluded

Engineering Measurements:

ALSEP Word No. 33

Symbol	Measurement	ALSEP Channel	Operating Range
AG-01	LSG Seismic Signal	39	± 10 Volts
AG-02	LSG Tide Signal	10	± 1000 μgals
AG-03	LSG Free Mode Oscillation Signal	23	± 10 Volts
AG-04	LSG Sensor Temperature	68	50.0° C ± 2° C
AG-05	LSG Instrument Housing Pressure	89	0.5 to 30 torr
AG-06	LSG Mass Position Signal	54	2.3 to 3.9 Volts
AG-07	LSG Oscillator Amplitude	24	15 ± 1.0 Volts (p-p)
AG-08	LSG Power Converter (+15V)	38	+15 ± .75 Volts
AG-09	LSG Power Converter (-15V)	53	-15 ± .75 Volts
AG-10	LSG Power Converter (+5V)	69	+5 ± .25 Volts

Bit Allocations for ALSEP Word 35 and 37:

Word \ Bit	1	2	3	4	5	6	7	8	9	10
35	DG-11						DG-12	DG-13		DG-14
	Bit 1	Bit 2	Bit 3	Bit 4	Bit 5	Bit 6		Bit 1	Bit 2	
37	DG-15	DG-16	DG-17	DG-18	DG-19					
					Bit 1	Bit 2	Bit 3	Bit 4	Bit 5	Bit 6

P-1

Upon command from ground to Shaft Encoder Mode, the Command Counter Bits (Bits 6 through 10) in ALSEP Word No. 37 will register 00001. After Command Execute (CMD067) and receipt of the following 90th Frame Mark, LSG Words in the main frame will contain the Coarse Encoder and Fine Encoder bit values as described below. Encoder data will be transmitted for ninety main frames and upon receipt of the next 90th Frame Mark LSG will automatically reset to Normal Scientific Data Mode.

Symbol	ALSEP Words	Item	ALSEP Bits									
			1	2	3	4	5	6	7	8	9	10
DG-7	4, 12, 20, 34, 46, 54, 62	Coarse Encoder (MSB)	Spare (1)	(MSB) 2^{18}	2^{17}	2^{16}	2^{15}	2^{14}	2^{13}	2^{12}	2^{11}	2^{10}
DG-8	6, 14, 22, 35 through 38, 40, 48, 56, 64	Coarse Encoder (LSB)	2^{9}	2^{8}	2^{7}	2^{6}	2^{5}	2^{4}	2^{3}	2^{2}	2^{1}	(LSB) 2^{0}
DG-9	8, 16, 24 42, 50, 58	Fine Encoder (MSB)	Spare (1)	(MSB) 2^{18}	2^{17}	2^{16}	2^{15}	2^{14}	2^{13}	2^{12}	2^{11}	2^{10}
DG-10	10, 18, 25 25 through 30, 44, 52, 60	Fine Encoder (LSB)	2^{9}	2^{8}	2^{7}	2^{6}	2^{5}	2^{4}	2^{3}	2^{2}	2^{1}	(LSB) 2^{0}

Figure 6-6.- LSG shaft encoder mode.
(36-word LSG main frame)

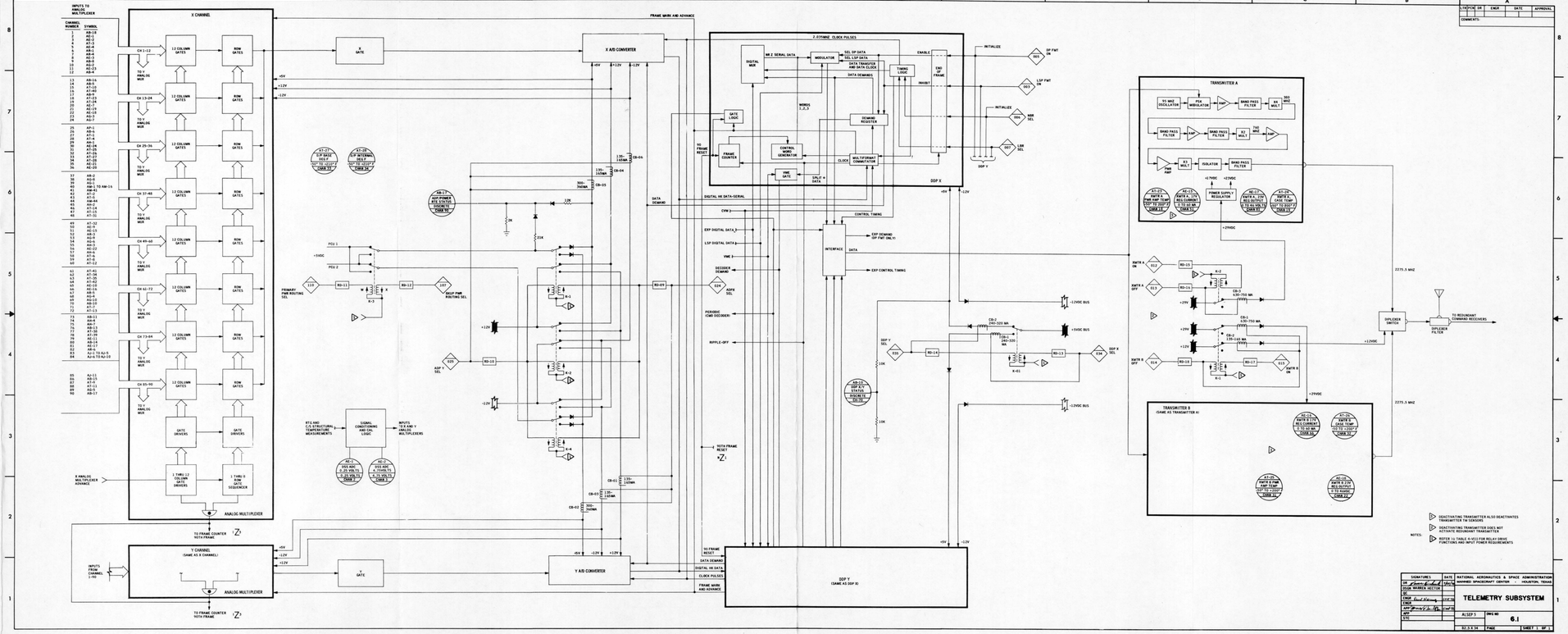
X CHANNEL
Y CHANNEL (SAME AS X CHANNEL)
ANALOG MULTIPLEXER
X A/D CONVERTER
Y A/D CONVERTER
DDP X
DDP Y (SAME AS DDP X)
TRANSMITTER A
TRANSMITTER B (SAME AS TRANSMITTER A)
DIPLEXER SWITCH
DIPLEXER FILTER
TO REDUNDANT COMMAND RECEIVERS
2275.5 MHZ
+29VDC
+12VDC
+5VDC
+19VDC BUS
FRAME MARK AND ADVANCE
DIGITAL HK DATA-SERIAL
CONTROL TIMING
DATA DEMAND
NOTES:
DEACTIVATING TRANSMITTER ALSO DEACTIVATES TRANSMITTER TW SENSORS.
DEACTIVATING TRANSMITTER DOES NOT ACTIVATE REDUNDANT TRANSMITTER.
REFER TO TABLE 4-VII FOR RELAY DRIVE FUNCTIONS AND INPUT POWER REQUIREMENTS
NATIONAL AERONAUTICS & SPACE ADMINISTRATION
MANNED SPACECRAFT CENTER - HOUSTON, TEXAS
TELEMETRY SUBSYSTEM
ALSEP 3
DWG NO
6.I
SHEET 1 OF 1

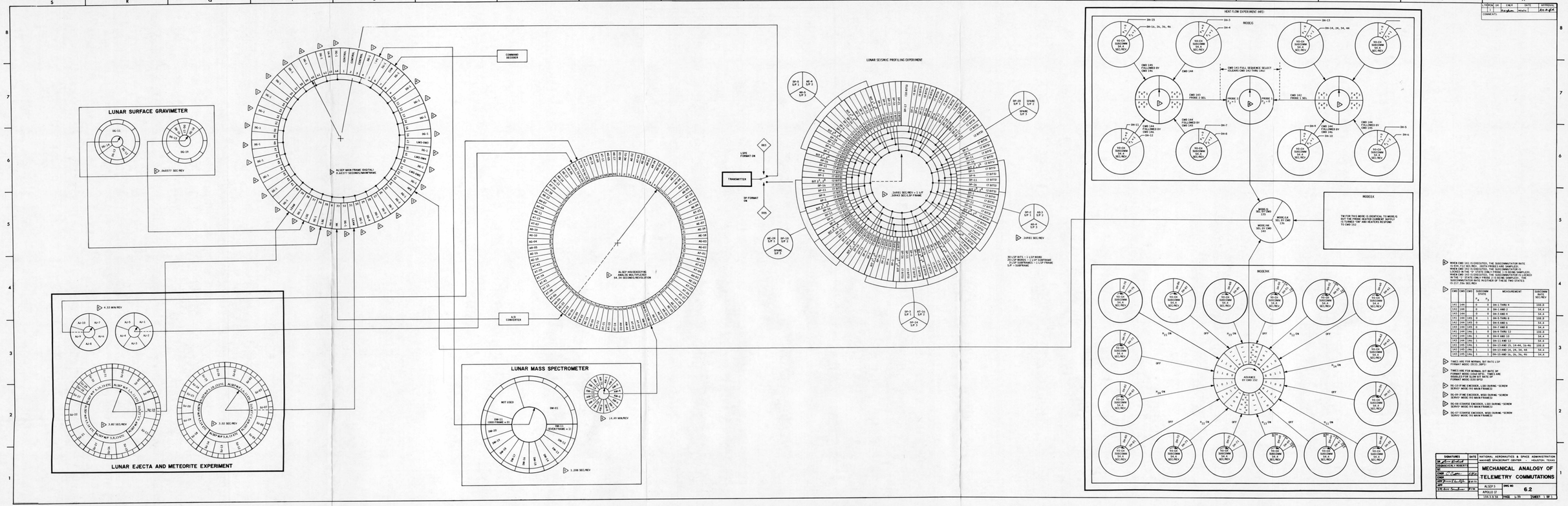

CHANGE NO.	CHECK	DATE	APPROVAL
1			
COMMENTS:			

SIGNATURES	DATE
[illegible]	
[illegible]	
[illegible]	
[illegible]	
[illegible]	
[illegible]	
[illegible]	

NATIONAL AERONAUTICS & SPACE ADMINISTRATION
MARSHALL SPACEFLIGHT CENTER, HOUSTON, TEXAS

MECHANICAL ANALOGY OF TELEMETRY COMMUTATIONS

ALSEP 5
APOLLO 12
DWG NO 6.2
10/13/70 PAGE 1-70 SHEET 1 OF 1

▷ WHEN CMD 141 IS EXECUTED, THE SUBCOMMUTATOR RATE IS 834.712 SEC/REV. (OOTH PRIME) ARE SAMPLED. WHEN CMD 142 IS EXECUTED, THE SUBCOMMUTATOR IS LOCKED IN THE "0" STATE (ONLY PRIME 1 IS BEING SAMPLED). WHEN CMD 143 IS EXECUTED, THE SUBCOMMUTATOR IS LOCKED IN THE "1" STATE (ONLY PRIME 2 IS BEING SAMPLED). SUBCOMMUTATOR RATE IN EITHER OF THESE TWO STATES IS 217.394 SEC/REV.

▷

CMD	CMD	CMD	SUBCOMM STATE		MEASUREMENT	SUBCOMM RATE SEC/REV
			T_A	T_B		
141	144		0	.5	DH-1 THRU 4	109.3
141	144		0	.5	DH-5 AND 3	54.4
141	144		0	.5	DH-3 AND 4	54.4
141	144	145	0	1	DH-5 THRU 8	109.3
141	144	145	0	1	DH-5 AND 6	54.4
141	144	145	0	1	DH-7 AND 8	54.4
141	144	146	1	0	DH-9 THRU 12	109.3
141	144	146	1	0	DH-9 AND 12	54.4
141	144	146	1	0	DH-11 AND 12	54.4
141	145	146	1	1	DH-13 AND 15, 14-44, 16-46	109.3
141	145	146	1	1	DH-13 AND 14, 24, 34, 44	54.4
141	145	146	1	1	DH-15 AND 16, 26, 36, 46	54.4

▷ THESE ARE FOR NORMAL BIT RATE LSP FORMAT MODE (9216 BIPS)

▷ THESE ARE FOR NORMAL BIT RATE SF FORMAT MODE (2048 BPS). THESE ARE SUBCOMMUTATED BY 1/16 OF THE SF FORMAT MODE (128 BPS)

▷ SG-10-FINE ENCODER, LSU DURING "SCREW SERVO" MODE (TO MAIN FRAME)

▷ SG-09-FINE ENCODER, MSU DURING "SCREW SERVO" MODE (TO MAIN FRAME)

▷ SG-08-COARSE ENCODER, LSU DURING "SCREW SERVO" MODE (TO MAIN FRAME)

▷ SG-07-COARSE ENCODER, MSU DURING "SCREW SERVO" MODE (TO MAIN FRAME)

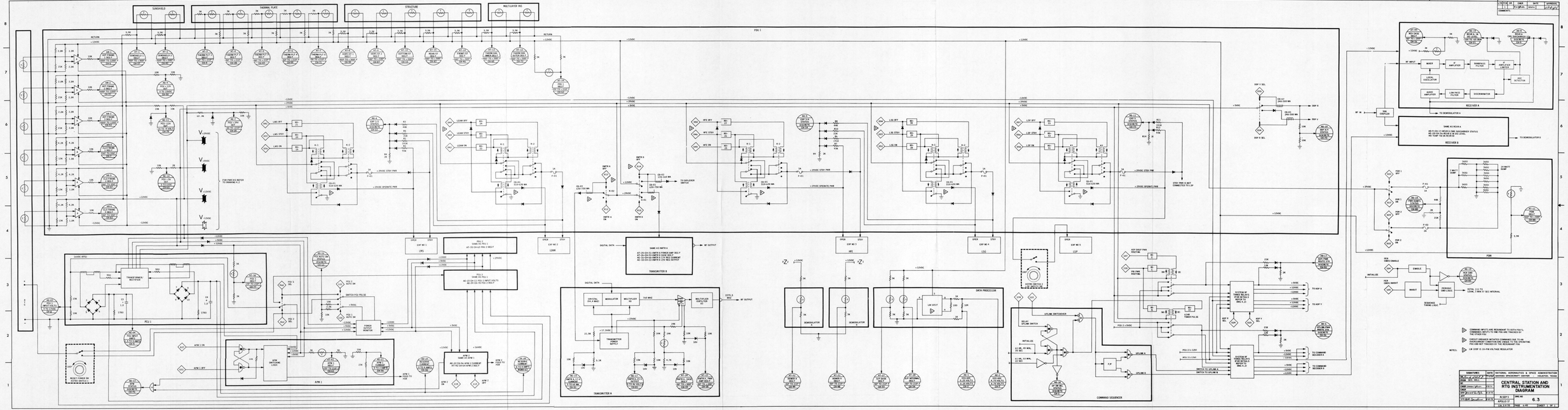

NOTES:

3. COMMAND INPUTS ARE REDUNDANT TO BOTH PDU'S; COMMANDS INPUTS TO ONE PDU ARE TRACKED BY THE OTHER PDU

2. CIRCUIT BREAKER INITIATED COMMANDS DUE TO AN OVERCURRENT CONDITION ARE UNIQUE TO THE OPERATING PDU AND NOT TRACKED BY THE REDUNDANT PDU

1. LM 105F IS 10-PIN VOLTAGE REGULATOR

SIGNATURES	DATE
DR Sam H. Herbert Jr.	7/10/72
DSGN GEO. HALL	
QC	
ENGR Warren Johnson	8/8/72
ENGR	
APP James E. [illegible]	8-8-72
APP	
STC Bill Cornelius	8-8-72

NATIONAL AERONAUTICS & SPACE ADMINISTRATION
MANNED SPACECRAFT CENTER · HOUSTON, TEXAS

CENTRAL STATION AND RTG INSTRUMENTATION DIAGRAM

ALSEP 5
APOLLO 17
126.5 X 35
DWG NO 6.3
PAGE 6-40
SHEET 1 OF 1

SECTION 7
LUNAR MASS SPECTROMETER (S205)

7.1 SYSTEM DESCRIPTION

The lunar mass spectrometer (LMS) will measure lunar atmospheric composition, density, and distribution. These data will be used to determine: sources of the atmosphere such as solar wind, volcanism, and meteorite impact; sinks of the atmosphere such as photoionization/solar wind field and thermal escape; transport phenomena such as theories of planetary exosphere dynamics, diurnal variations and gas venting of source; residual contamination which is determined by diffusion rates of gas clouds and the outgassing rate of the surface.

7.1.1 LMS

The instrument is a three-channel magnetic sector field mass spectrometer with a Nier-type thermionic electron bombardment ion source.

7.1.2 LMS Electronics

The LMS electronics consist of an electronic multiplier, preamplifier, discriminator, counter, and data compressor for each of three mass ranges.

7.1.3 Ion Production, Acceleration, and Collection

Ions are produced by bombarding a sample of the lunar atmosphere with electrons emitted from a hot tungsten filament. The ions are accelerated by a stepped high voltage sweep having an exponential waveform and collimated into a beam that is directed between the poles of a 90-degree sector permanent magnetic field. The magnetic field separates the beam into various trajectories. The radius of curvature of each trajectory depends on the mass of the ions. The ions impinge upon three collector slits appropriately

located to collect ions in the mass ratio of 1:12:27 [i.e., in the mass ranges from 1 to 4, 12 to 48, and 27.4 to 110 atomic mass units (AMU)].

7.1.4 Mass Spectrometer Scanning

The mass spectrometer is scanned by varying the ion accelerating voltage from 320 volts to 1420 volts in a series of 1350 steps.

FUNCTION	NUMBER OF STEPS	VOLTS/ STEP	VOLTAGE RANGE
BACKGROUND	10	0.0	0
CALIBRATION	10	0.0	0
LINEARIZATION NO. 1	690	0.4	320 V TO 596 V
LINEARIZATION NO. 2	250	0.8	596 V TO 796 V
LINEARIZATION NO. 3	390	1.6	796 V TO 1420 V
	1350		

The sweep voltage dwells on each voltage step for one main frame (0.6 seconds) while the 21-bit electron counter accumulates ion counts.

7.2 SYSTEM OPERATION

7.2.1 Ion Source

The ion source consists of two filaments, one of which acts as an anode and the other (heated) as the cathode for the electron bombardment. In the event that one filament should burn out, the other filament can be activated as the cathode and the burned out filament becomes the anode. Two plates, called "J" plates, are used to focus the beam on the three slits in the analyzer chamber.

7.2.2 Emission Control Circuits

The emission current is either fixed or cyclic - selection being made by ground command.

The fixed mode has bias voltage -70 Vdc at 250 microamps. The cyclic mode bias voltage is stepped through -70 Vdc, -17.5 Vdc, -25 Vdc, and -20 Vdc at 100 microamps. Each step is held for one complete scanning cycle (13.5 minutes).

7.2.3 Ion Pump

The ion pump is a cold cathode type of ionizing pump in which the gas atoms are ionized and trapped in an area of high magnetic field. The current generated by the ion flow in the pump will serve as a vacuum measurement.

7.2.4 Analyzer Chamber

The analyzer chamber consists of the main chamber area which has a permanent magnet mounted such that the magnetic field is perpendicular to the ions' plane of motion. There are three slits and behind each of them a multiplier tube is mounted and accurately aligned. The multiplier tube consists of a number of grid elements mounted and evenly spaced along the tube. These elements when mechanically shocked will emit electrons. The positive potential is applied to the last grid (anode), and the negative ground is connected to the first grid.

7.2.5 High Voltage Sweep

The program sweep high voltage power supply circuit produces the sweep high voltage that is used to accelerate the ions. The digital circuitry provides a choice of two outputs:

A. A voltage sweep that is automatically exponential with respect to time.

B. A voltage that can be locked at a given value.

The exponential voltage waveform is accomplished by counting first every fourth frame count, then every other count, and finally every count.

7.2.6 Pre-Amp/Discriminator Circuitry

There is a pre-amp/discriminator circuit for each channel of data. Also included is a calibration oscillator and pulse shaper. The oscillator is used once during each cycle to produce a known count in each counter. A switching circuit is used to set the discriminator level high or low. This level determines the height of the pulse necessary to pass the discriminator and allows the count to go through but inhibits the noise level.

7.3 DATA HANDLING AND DATA COMPRESSION

Ion data are detected and counted in a 21-bit binary counter. The data counts are parallel gated into a 21-bit shift register upon arrival of the main frame mark. The binary counts now in the shift register are shifted towards the high order end (MSB end) and each bit shift is recorded in a 4-bit shift counter. The shift stops when a logic "1" state is detected in the twenty-first bit or when 14 shifts have occurred. If 14 shifts have occurred and the twenty-first bit is still a logic "0", the 4-bit shift counter is advanced to 15 while the twenty-first bit remains at "0". The 6 high order bits currently in the shift register plus the 4 bits from the shift counter are gated into a 10-bit shift register to be shifted out at command on the data demand line. The twenty-first bit which is always a "1" (unless the 4-bit shift counter is 15 and then it is a "0") is known and, hence, 7 bits of data information are known while only 6 bits of science data are sent.

TABLE 7-I.- LMS PRESET CONDITIONS

Emission/Filaments	Off
Multiplier	Low
Disc Low and J-Plate Voltage Step	Enabled
Bakeout Heater	Disabled
Ion Pump, Multiplier, and Sweep HV	Off

TABLE 7-II.- LMS POWER USAGE

Circuit	Circuit Input Power Operate	Circuit Input Power Standby
1. Emission Control	4.42w	----
2. Sweep High Voltage Power Supply	0.45w	----
3. Digital Sweep Control	0.69w	----
4. Preamps. & Discrim.	1.21w	----
5. Counter & Data Comp.	1.50w	----
6. Housekeep Multiplexer	0.42w	----
7. Signal Conditioning	0.37w	----
8. Multiplier High Voltage Power Supply	1.11w	----
9. Low Voltage Power Supply	6.61w	----
10. Ion Pump High Voltage Power Supply	0.35w	----
11. Thermal or Dust Cover Control	0.5 w	6.7 w
12. Ion Source Bake Out Heater		11.00w
13. Sensors, Misc.	0.20w	0.10w

P-1

	MSB						MSB			
BIT POSITION	1	2	3	4	5	6	7	8	9	10
DATA	SCIENCE DATA						COUNT			

Figure 7-1.- LMS data format for ALSEP words 17,19, and 21.

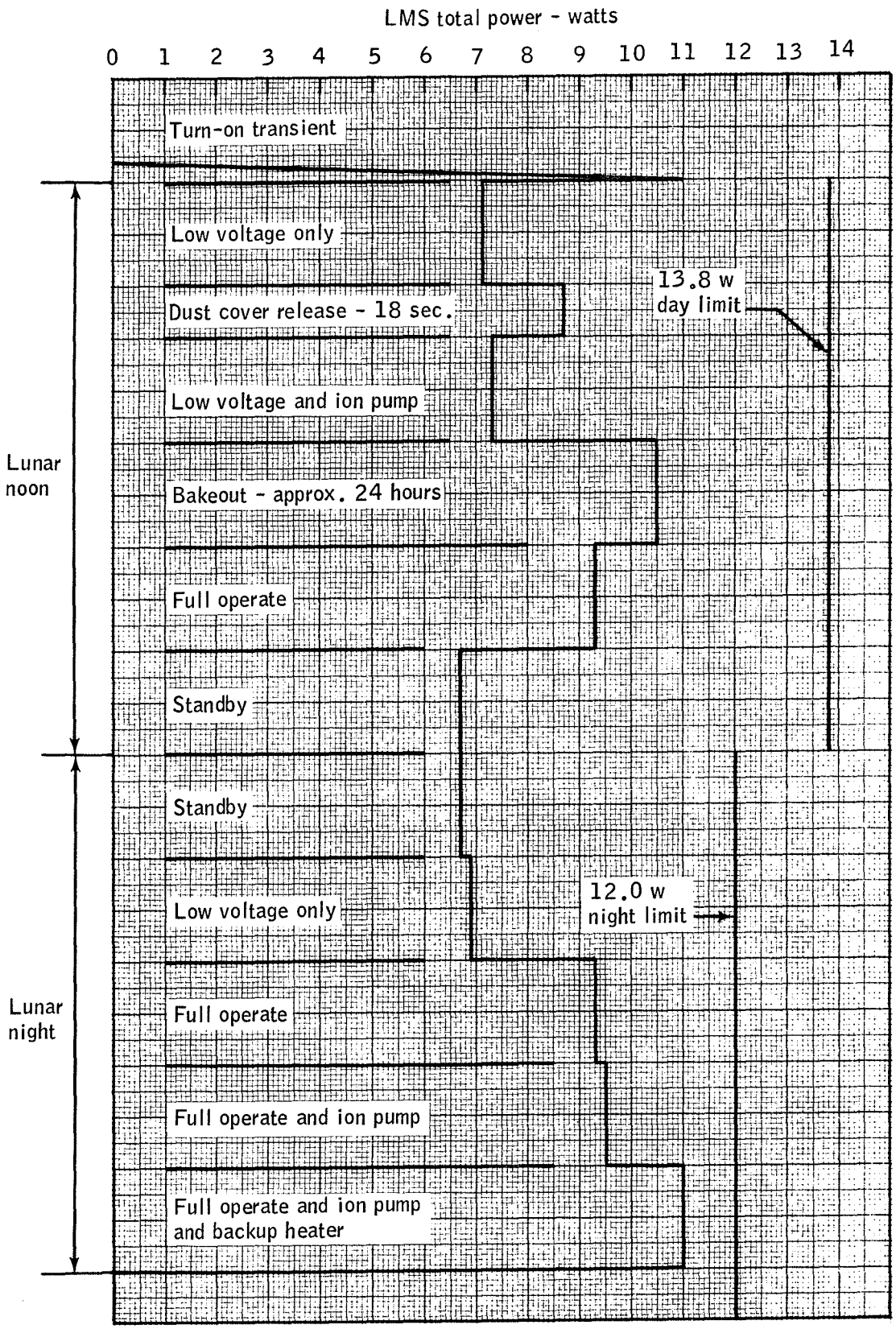

Figure 7-2.- LMS power profile.

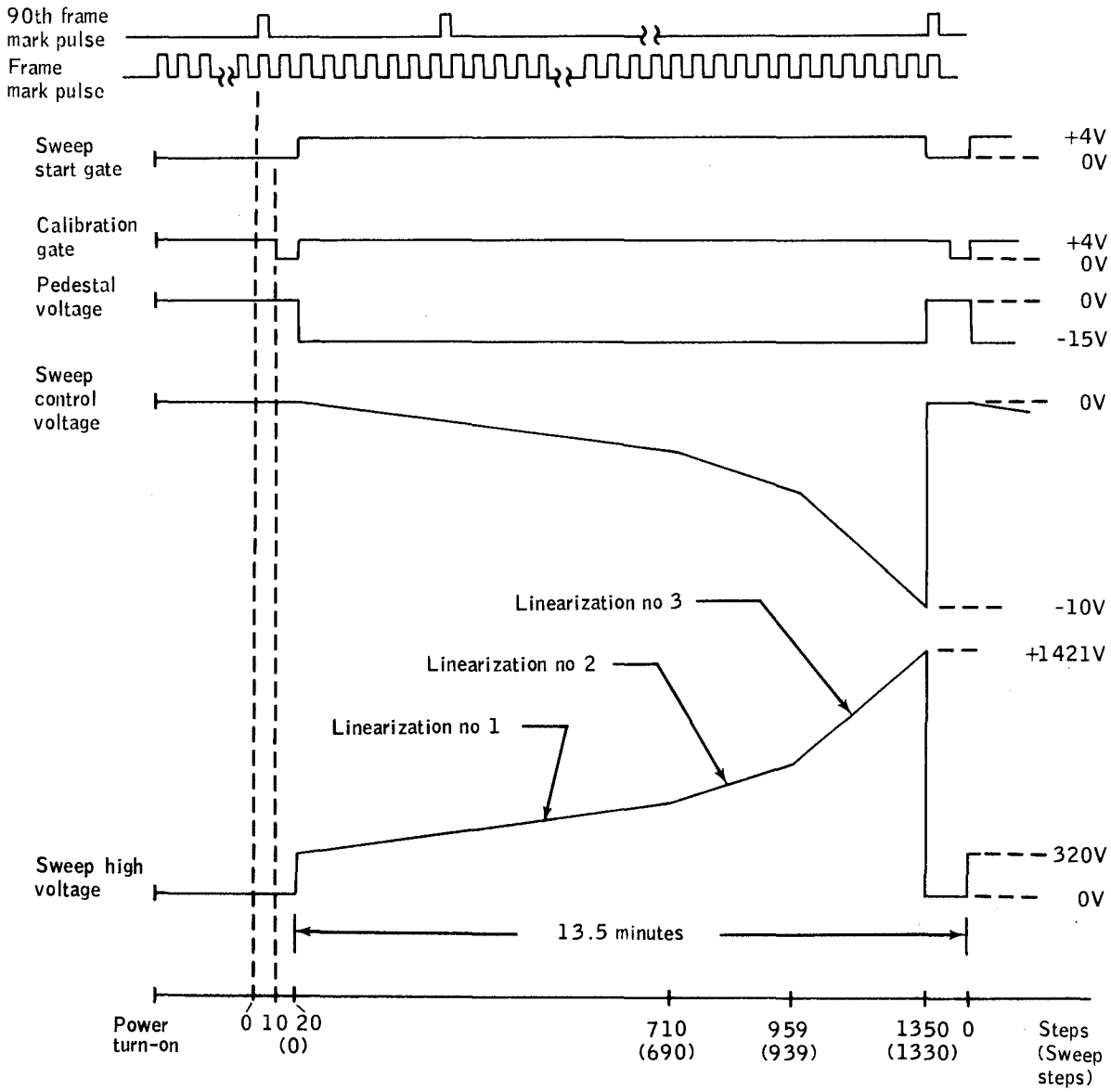

Figure 7-3.- Programed sweep HV power supply timing diagram.

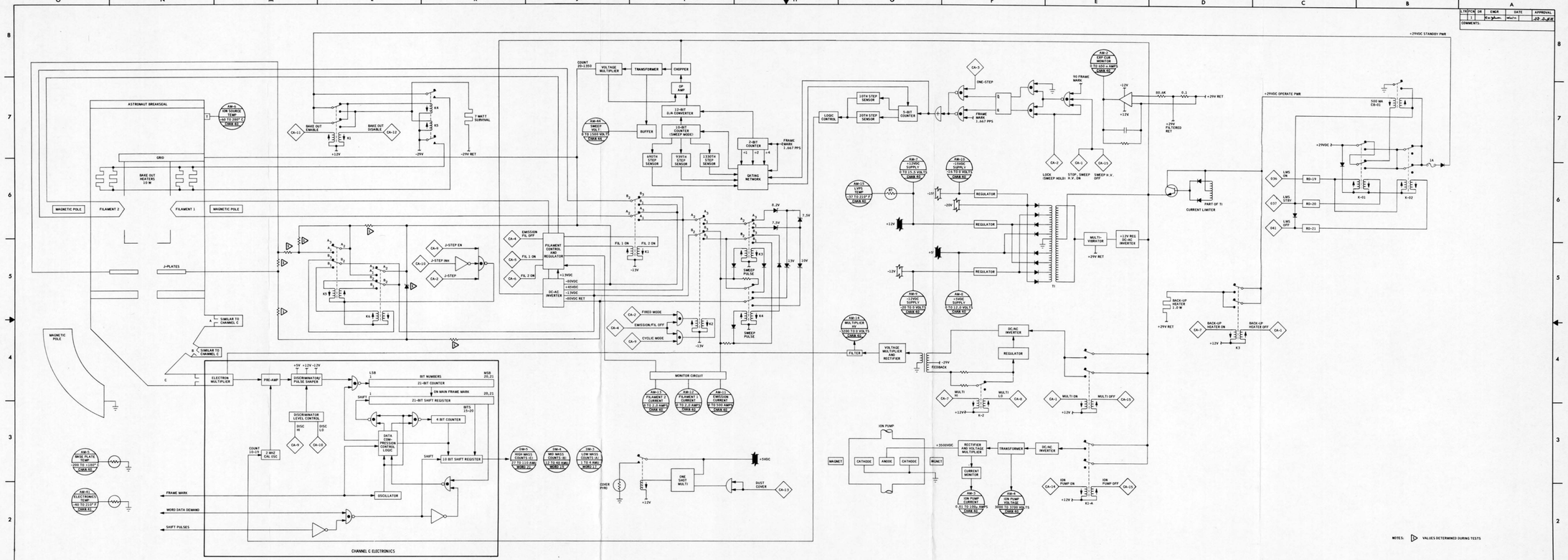

SIGNATURES	DATE	NATIONAL AERONAUTICS & SPACE ADMINISTRATION
DR	10-10-68	MANNED SPACECRAFT CENTER HOUSTON, TEXAS
DSGN		
QC		**LUNAR MASS SPECTROMETER SYSTEM SCHEMATIC (S205)**
ENGR	8/8/70	
ENGR		
APP	8-27-70	ALSEP 3 — DWG NO 7.1
APP	8-28-70	APOLLO 12
		21.3 X 34 — PAGE 7-9 — SHEET 1 OF 1

SYMBOL	DR	ENGR	DATE	APPROVAL
COMMENTS:				

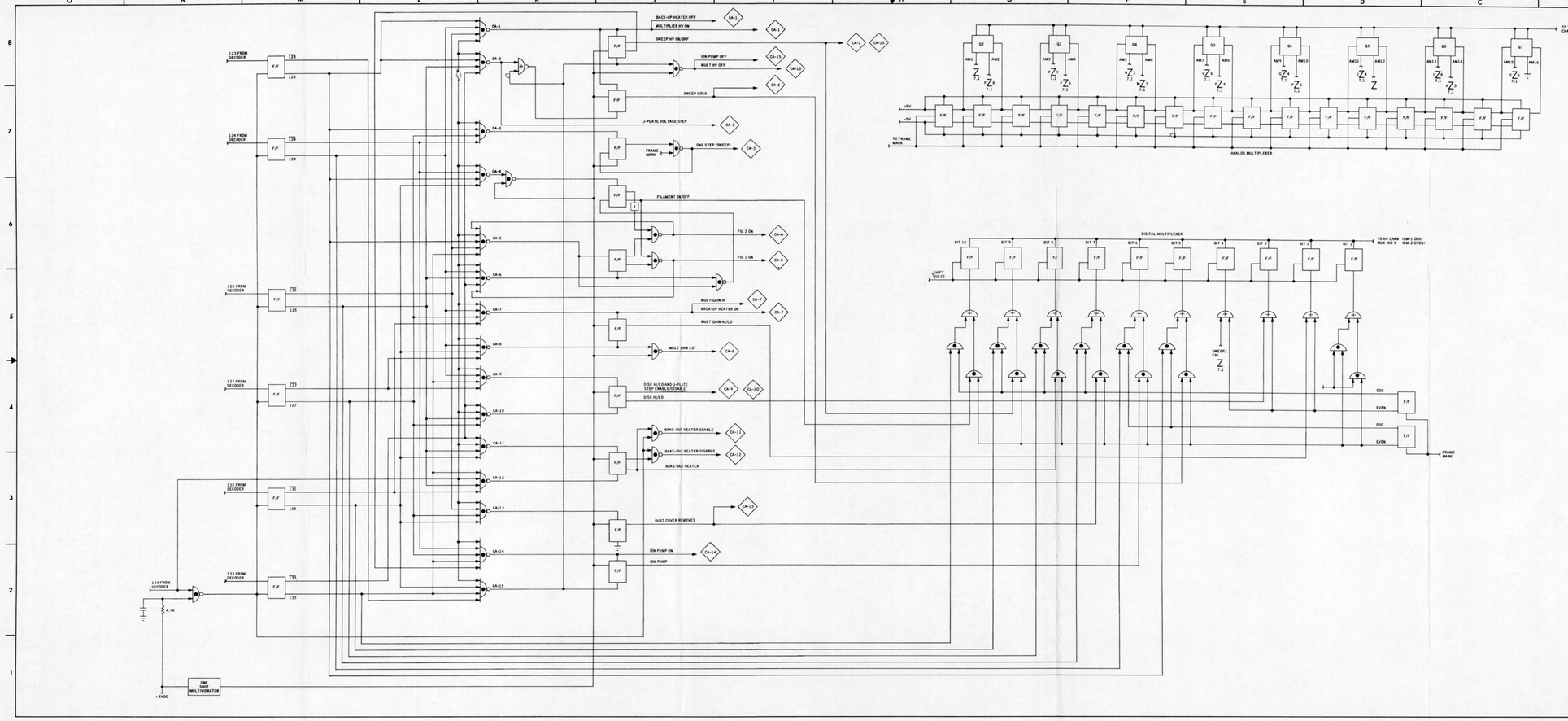

CMD	CMD NUMBER			
CA-1	123	124	125	EXP ON/NTR OFF
CA-2	123	125	133	LOCK SWJ-PLT STEP/FIXED
CA-3	123	127	134	SWP STEP
* CA-4	123	132	134	EMIS/FIL OFF/EMISSION CNTL SEL
CA-5	123	133	135	FIL 1 ON
CA-6	124	125	133	FIL 2 ON
CA-7	124	127	133	MULT HI/NTR ON
* CA-8	124	132	127	MULT LO
CA-9	124	133	127	DISC HLD/J-PLT STP EN/CYCLIC
* CA-10	125	127	135	DISC LOJ-PLT STP IN
CA-11	125	132	133	BAKEOUT ON
* CA-12	125	133	132	BAKEOUT DIS
CA-13	127	132	125	DUST CVR GO
CA-14	127	133	124	ION PUMP ON
* CA-15	132	133	123	EXP OFF

*PRESET AT TURN ON

SIGNATURES	DATE
DR	
DESIGN	
CHECK	
CMDR	8-8-74
CHIEF	
APP	8-8-74
STC	8-8-74

NATIONAL AERONAUTICS & SPACE ADMINISTRATION
MANNED SPACECRAFT CENTER HOUSTON, TEXAS

LUNAR MASS SPECTROMETER COMMAND/ MULTIPLEXING SCHMATIC

ALSEP 5
APOLLO 17

DWG NO 7.2

82.3.9.34 PAGE 7-18 SHEET 1 OF 1

SECTION 8
LUNAR EJECTA AND METEORITE EXPERIMENT (S207)

8.1 SYSTEM DESCRIPTION

The lunar ejecta and meteorite experiment (LEAM) consists of three particle sensors and associated electronics. Two of the sensors have front and rear film assemblies and one has only a rear film assembly.

A dust particle impacting on the film causes the metal to ionize. The ions and electrons are collected on the films and grids which are biased negative and positive, respectively. Identification of the particle impact point on either the front or rear film assembly is made by recording the film strip and grid strip at which the signal was generated.

Signals from each collector and film strip in both the front and rear film assemblies are threshold detected. When a signal exceeds the threshold, it is recorded in a storage register location for that particular film or collector grid strip. The amplitude of the impact is proportional to the generated ionization and to the signal superimposed on the films and grids. This amplitude is measured and recorded as a binary number in a storage register. The time interval between impacts on the front and rear films is measured and recorded in another storage register.

The particle impact on the rear film is also detected by a crystal microphone attached to the center of the assembly. The amplitude of the microphone signal is considered proportional to the momentum and is analyzed and stored in the register.

A secondary noise microphone is mechanically isolated from the active microphone in one segment of the film-grid matrix of the

single film sensor. Detectable signals from impacts or noise are accumulated in the storage register.

The system starts to accept new data when any 1 or combination of the 3 sensors detects a particle at the front or rear film or on the microphone plate. The recognition of an impact causes all storage register bits, except those in the accumulators, to reset prior to the transfer of the new data, which includes sensor identification, impact amplitude and elapsed time of travel between front and rear assemblies. The microphone signal is sampled for a short time period only to avoid analysis of impact plate reflections.

8.2 SYSTEM OPERATION

8.2.1 Electronics

Each film strip will interface with a buffer amplifier. These amplifiers will also inject the calibration signals from the calibration circuit. The outputs from the buffer amplifiers of film strips of a particular sensor array are added algebraically. When the resultant signal is above the threshold level it is peak detected and the peak detected output is a binary count which is a logarithmic function of the input signal. When an event occurs at any sensor array the actual film strip impacted is identified. Each film has a corresponding storage register consisting of one storage element for each film strip. Each film strip signal is individually amplified and threshold detected so that signals exceeding threshold cause a status change in the corresponding element of the film sensor storage register. To avoid erroneous strip identification caused by capacitive crosstalk in the sensor, the circuit associated with the film strip actually impacted must inhibit the outputs

from the remaining circuits associated with the same film. The film is biased at a potential of -3.0 ± 0.1 volts.

When an event occurs at any sensor array, the actual collector strip impacted will be identified. Each set of collector strips has a corresponding storage register consisting of one storage element for each collector strip. Each collector strip signal is individually amplified and threshold detected so that signals above a specified level result in a status change in the storage register. To avoid erroneous collector strip identification caused by capacitive crosstrack in the sensor, the circuits associated with the strip impacted must inhibit outputs from the remaining circuits associated with the same collector strip assembly immediately following impact. The collector grid strip is biased at +24 ± 0.7 volts.

The suppressor grids are biased at a potential of -7 ± 0.2 volts.

The main microphone and secondary microphone interface with identical amplifier and filter circuits. After the amplifier and filter circuits, the main microphone is peak detected and the secondary microphone is binary counted.

The system will start a measurement sequence whenever a signal is detected at either the film or main microphone P-1
sensors. Each of the dual sensors and the single sensor are separate systems. Upon receipt of a signal, all buffer storage registers will be reset, except for the accumulators. Subsequent to this reset a strobe signal is provided to all threshold detectors to allow transfer of the new data to the registers.

The electronics associated with the two dual film sensors will measure the time taken by a particle to travel between the front and rear sensor film. The logic will monitor the four front and four rear film strip threshold detector outputs to

provide the start and stop signals to the elapsed time logic. The output of the logic is a binary and provides a maximum count to the buffer storage when no rear film impact is observed within 100 ms of a front film impact.

8.2.2 Electrical Power

The LEAM accepts 29 volts from the ALSEP. Whenever the experiment is switched to standby, the 29 volts are routed to the survival heater. This heater can be ground commanded to off. When the reserve power drops below an established minimum, the experiment operating power is switched off and the survival heater switched on as part of the ALSEP turn-off sequence.

The circuit breaker for the experiment in the central station switches the 29 volts from the operate to the survival mode whenever the current drawn exceeds 500 ± 50 ma for 0.2 ms. |P-1

The experiment design also includes a current limiter which prevents the current from exceeding 450 ma for any mode including turn-on or cover removal with the heater on. |P-7

8.2.3 Thermal

The temperature limits for the sensor electronics and control electronics are controlled by the thermal control system from -30° C to +65° C in the operate mode and -55° C in the survival mode.

8.2.4 Calibrate

The experiment will be calibrated upon command by both ground command (111) and the auto sequencer.

The calibration circuit injects the signal into the sensor buffer amplifiers. The signal will calibrate the overall sensor electronics and data storage system. Two calibrate modes are

selected alternately by successive transmissions of the calibrate command. The response of the experiment to a calibrate command is delayed until the next parallel load pulse for transfer of data from the buffer register to the output shift register.

In "mode one", appropriate signals are injected to verify the function of the front film amplifiers 3 and 4, the main microphone amplifiers, secondary microphone amplifiers, and rear films and collector amplifiers. The signals to the rear film and collector amplifiers are delayed by a time interval to verify the elapsed time circuitry. P-1

In "mode two", signals are injected into the front film amplifiers 1 and 2, main microphone amplifier and all rear film amplifiers. The signal into the rear films will be delayed by a longer time interval than in "mode one" to verify the elapsed time circuitry. The mode two cal level is longer and lower than the mode one cal level.

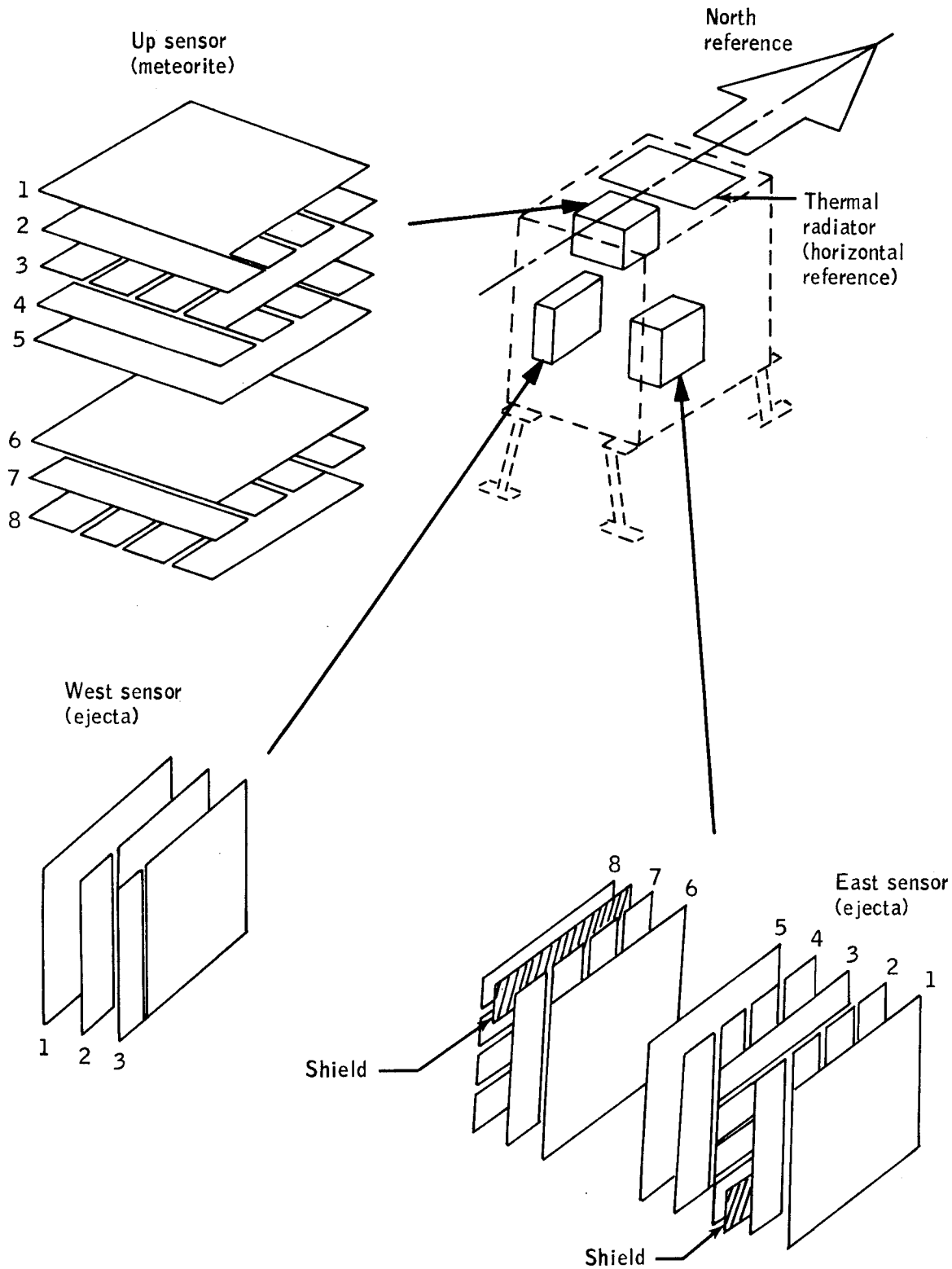

Figure 8-1.- Sensor locations.

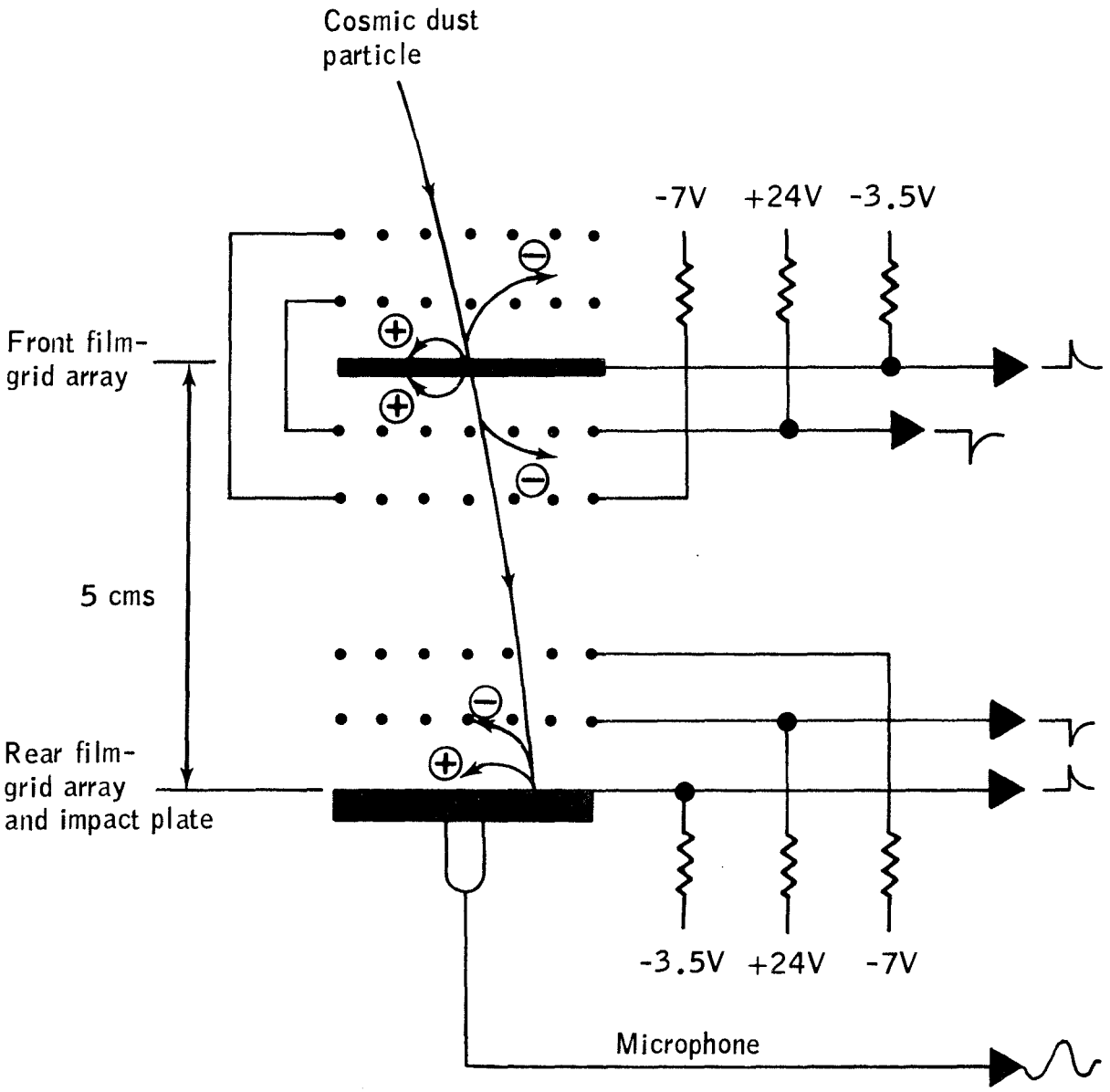

Figure 8-2.- The basic dual film sensor.

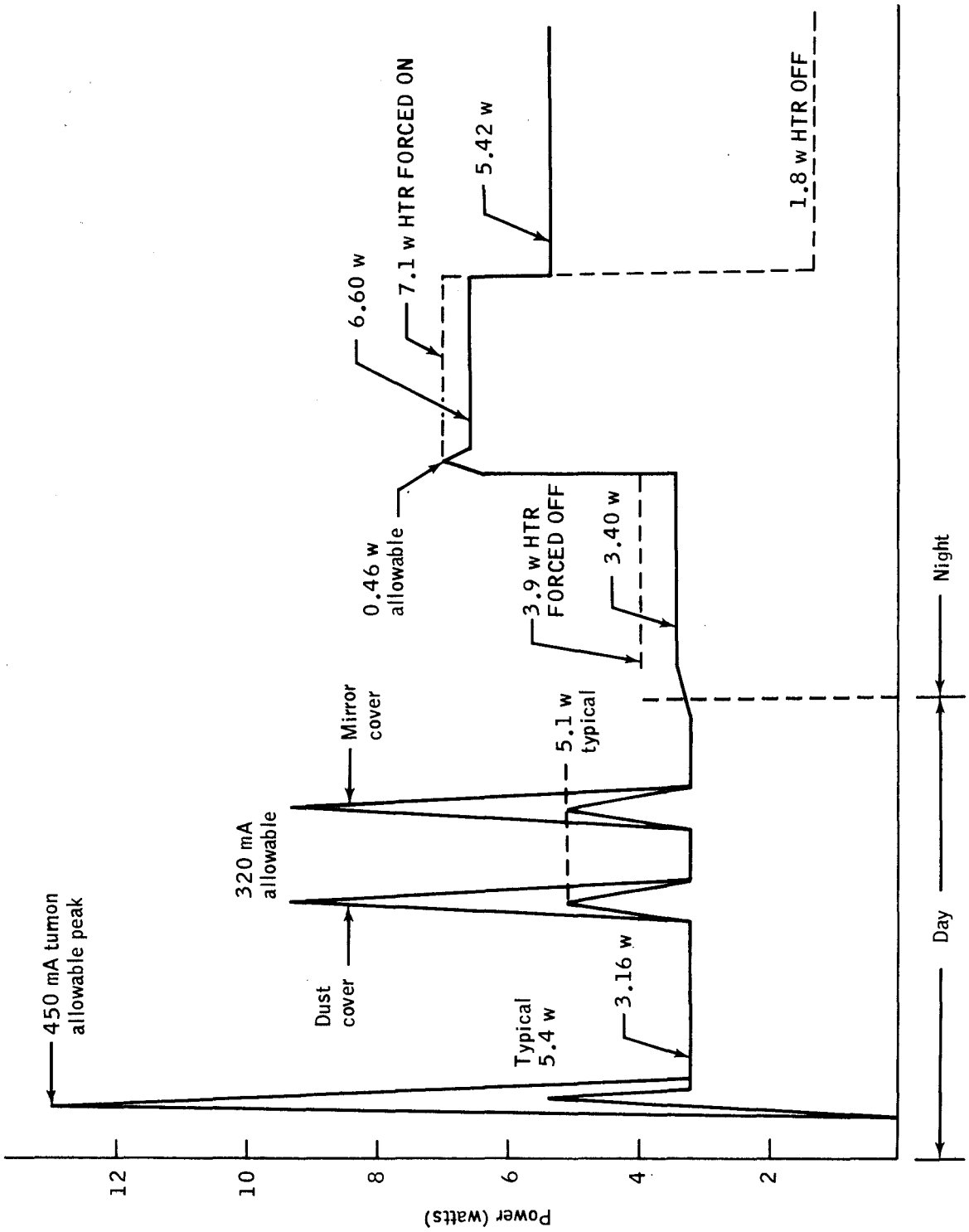

Figure 8-3.- LEAM power profile.

VENDOR	CODE	DATE	APPROVAL
COMMENTS:			

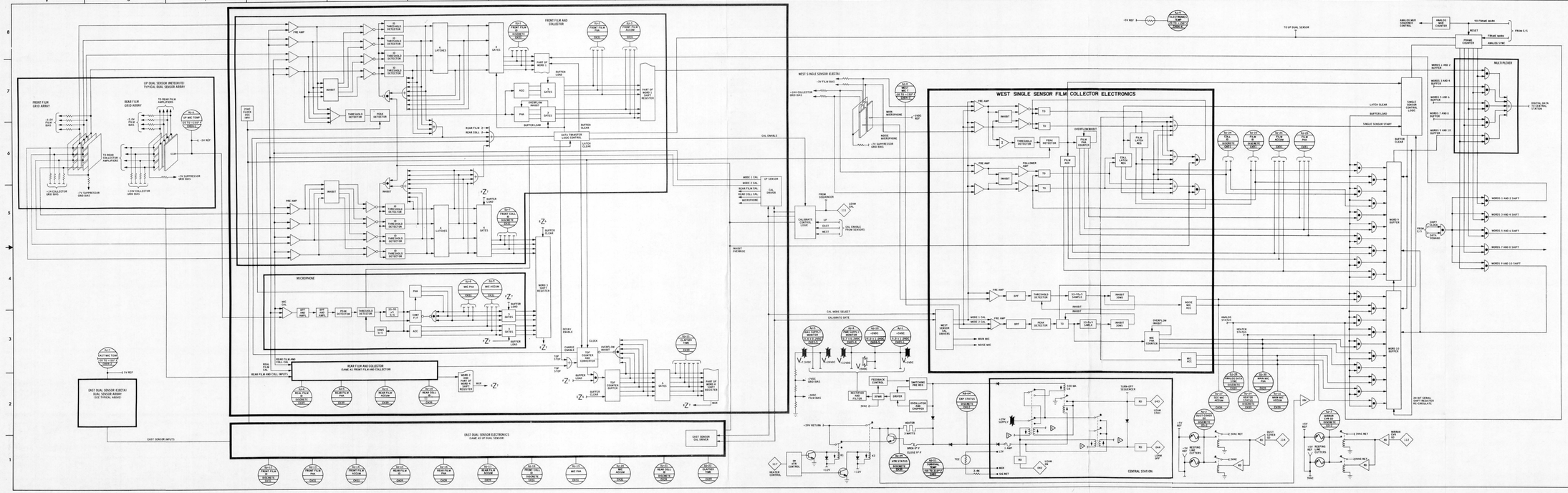

NOTES: ▷ REFER TO TABLE VI(I) FOR RELAY DRIVER FUNCTION AND INPUT POWER REQUIREMENTS

SIGNATURES	DATE	NATIONAL AERONAUTICS & SPACE ADMINISTRATION
		MANNED SPACECRAFT CENTER — HOUSTON, TEXAS
		LEAM SYSTEM SCHEMATIC
		ALSEP 1 — DWG NO. 8.I
		APOLLO 12
		12.1 X 34 — PAGE 8-9 — SHEET 1 OF 1

SECTION 9
HEAT FLOW EXPERIMENT (S037)

9.1 SYSTEM DESCRIPTION

9.1.2 Experiment Objectives

The heat flow experiment (HFE) measures the net outward flux of heat from the moon's interior. Measurement of lunar heat flux will provide:

A. A comparison of the radioactive content of the moon's interior and the earth's mantle.
B. A thermal history of the moon.
C. A lunar temperature-versus-depth profile.
D. The value of thermal parameters in the first three meters of the moon's crust.
E. A measure of lunar surface brightness temperature.

When compared with seismic measurements, data from the HFE experiment will provide information on the composition and physical state of the moon's interior.

9.1.2 Major Components

The major components of the HFE are two sensor probes and an electronics package as shown in Figure 9-1.

9.1.2.1 Sensor probes.- The probes consist of epoxy-fiberglass tubular structures which support and house temperature sensors, heaters, and the associated electrical wiring. Each probe has two sections, each 55 cm (21.6 inches) long, spaced 2 cm (0.8 inches) apart and mechanically connected by a flexible spring. The flexible spring allows the probe assembly to be bent into a U-shape to facilitate packing, stowage and carry.

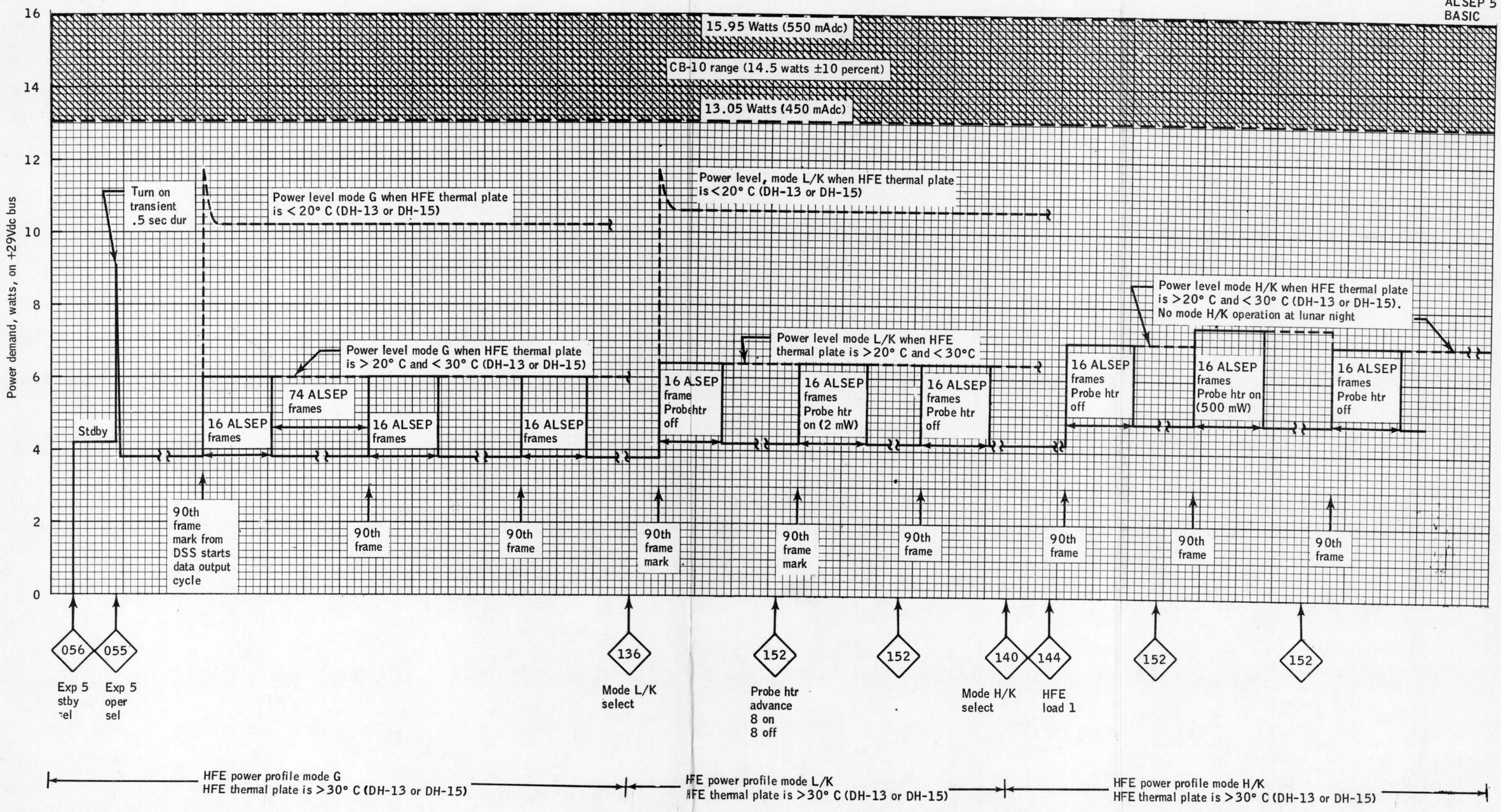

Figure 9-1. - HFE power profile.

There is a gradient heat sensor surrounded by a heater coil at each end of each probe section. Each of these two gradient sensors consists of two resistance elements. These four resistance elements are connected in an electrical bridge circuit. Ring sensors are located 10 cm (4 inches) from each end of each probe section. Each of these two ring sensors has two resistance elements. These four resistance elements are connected into an electrical bridge circuit. Also, four thermocouples are located in the cable of each probe, identified and spaced as follows: number one at the upper end of the probe, numbers two, three and four spaced 25, 45, and 65 inches up the cable from the end of the probe. These thermocouples measure the temperature of lunar material from top of the probe to the lunar surface.

9.1.2.2 Electronics package.- The heat flow electronics package contains printed circuit boards which support the functional circuits of the experiment. These functions are: Command processing, timing and control, temperature measurement sequencing, heater excitation sequencing, data handling, and power and electronics thermal control.

The command receiver processes and outputs each of the ground commands to allow operational control of the heat flow experiment as tabulated in Table 9-I.

The timing and control function accepts timing pulses from the central station and sequence controls the functional operations such as measurement and heat pulse sequences.

The temperature measurement sequence programmer controls the sequence in which each sensor in each probe outputs its data to the data handling function.

TABLE 9-I. - HFE MEASUREMENT OPTIONS (MODES 1 AND 2)

Location/Name	Symbol \ Cmds and Order (Octal)	135*	135*	135*	135*	135*	135*	135*	135*	135*	135*	135*	135*	135*	135*	135*
		141	141	141	141	141	142	142	142	142	142	143	143	143	143	143
		–	144	144	–	144	–	144	144	–	144	–	144	144	–	144
		–	–	145	145	–	–	–	145	145	–	–	–	145	145	–
		–	–	–	146	146	–	–	–	146	146	–	–	–	146	146
Temp grad high sens Temp grad high sens	DH-01 DH-02	HFE-Seq/Ful	Hi only													
Temp grad high sens Temp grad high sens	DH-03 DH-04	HFE-Seq/Ful	Hi only	180 frame rep rate			HFE Seq/P1									
Temp grad low sens Temp grad low sens	DH-05 DH-06	HFE-Seq/Ful		Lo only								HFE Seq/P2				
Temp grad low sens Temp grad low sens	DH-07 DH-08	HFE-Seq/Ful		Lo only												
Probe ambient temp Probe ambient temp	DH-09 DH-10	HFE-Seq/Ful				Amb only		16 out of 90 frames								
Probe ambient temp Probe ambient temp	DH-11 DH-12	HFE-Seq/Ful				Amb only										
Temp ref junction Probe cable temp (1)	**DH-13 ***DH-14,24,34,44	HFE-Seq/Ful			TC & ref			360 frame rep rate			90 frame rep rate					
Temp ref junction Probe cable temp (2)	**DH-15 ***DH-16,26,36,46	HFE-Seq/Ful	720 frame rep rate		TC & ref											

*** Thermocouple group measurement
** DH-13 and DH-15 are identical physical measurements separated in time by approximately 54 seconds
* Command 135 selects Mode 1, Command 136 selects Mode 2

TC_1 Group

Symbol	Data
DH-14	Ref TC-TC_1 (4)
DH-24	TC_1 (4) - TC_1 (1)
DH-34	TC_1 (4) - TC_1 (2)
DH-44	TC_1 (4) - TC_1 (3)

R-Bits

R_2	R_1
0	0
0	1
1	0
1	1

TC_2 Group

Symbol	Data
DH-16	Ref TC-TC_2
DH-26	TC_2 - TC_2 (1)
DH-36	TC_2 - TC_2 (2)
DH-46	TC_2 - TC_2 (3)

The heater excitation sequencer controls the current timing and routing to the probe heaters to produce a known amount of heat over a known period of time.

The data handling function converts analog measurements into digital data and outputs to the C/S. The data handling also outputs heater status and mode status, etc., to be shipped to ground control via C/S in response to data demand and shift pulses.

The power supply and thermal control functions distribute electrical power at the different voltages needed and help maintain operating temperatures in the electronics package.

A sunshield thermally also protects the electronics package from externally generated heat. Two reflectors built into the open ends of this sunshield aid in the radiation of internally generated heat that otherwise might be entrapped under the sunshield. The electronics package is further thermally protected by multilayer insulation and thermal control paint.

9.1.3 Deployment

The electronics package is deployed ≈30 ft away from the central station. On top of the package are level and alignment devices. A bubble level is mounted to provide reference for leveling the package within limits. A sun shadow device is provided for reference to orient the package with reference to compass cardinal directions.

The two sensor probes are emplanted in 2.44-meter (8.05-foot) boreholes. These holes are drilled by the astronaut with the Apollo lunar surface drill (ALSD). (Refer to Section 8 of the Lunar Roving Vehicle System Handbook.) The depth the probes are placed beneath the surface is determined by the crew with the emplacement tool. The two probes are connected by two multilead cables to the HFE electronics package.

9.2 HFE MODES

The HFE performs its measurements in three basic modes of operation: Mode 1 or Mode/G, Mode 2 or Mode/LK, and Mode 3 or Mode/HK.

9.2.1 Mode/G, Normal Gradient Mode

The normal gradient mode is used to monitor the heat flow in and out of the lunar surface crust. Heat from solar radiation flows into the moon during the lunar day and out of the moon during the lunar night. This larger heat gradient in the near subsurface of the moon will be monitored and measured in order to differentiate it from the more steady but smaller heat flow outward from the interior of the moon.

9.2.2 Mode/LK, Low Conductivity, and Mode/HK, High Conductivity

Thermal conductivity of the lunar material is measured with the principle of creating a known quantity of heat at a known location by exciting one of the eight probe heaters, and measuring the resultant probe ambient temperature and temperature differentials for a period of time. Because it is not known whether the surrounding material will have a low conductivity (loosely consolidated material) or a high conductivity (solid rock), the capability to measure over a wide range using two modes of operation is incorporated into the HFE design.

9.2.3 Ambient Temperature Measurements

Ambient temperature measurements are made at any gradient bridge or at any one of the thermocouples spaced at four points along each probe cable. In each probe cable, the thermocouples are placed at the top gradient sensor and at distance increments of 25, 45, and 65 inches above the top gradient sensor. The reference junction for the thermocouples is mounted on the HFE electronics package thermal plate.

9.2.3.1 Mode/G.- Normal (gradient) mode initiated by octal command 135 (gradient sensor excitation - no heater excitation). The heat gradients (temperature differentials) and probe ambient temperatures are measured with the gradient sensors and thermocouples spaced along the two cables connecting the probes to the electronics package. In each deployed probe, the temperature difference between the ends of each of the two sections is measured by the gradient bridge consisting of the gradient sensors positioned at the ends of the probe section. Gradient temperature differentials are measured in both the high sensitivity and low sensitivity.ranges.

9.2.3.2 Mode/LK.- Low conductivity mode (ring source) initiated by octal command 136 (gradient sensor excitation - low heater excitation). The probe heater selected by octal command 152 receives low power excitation and dissipates 2 milliwatts of power. The thermal conductivity is determined by measuring the temperature rise of the gradient bridge around which the selected heater is located. The temperature which the heater must reach to dissipate the power input is the measure of thermal conductivity of the surrounding material. The low conductivity measurements are performed in the sequence selected by earth command.

9.2.3.3 Mode/HK.- High conductivity mode (heat pulse) initiated by octal command 140 (ring sensor excitation - high heater excitation). The probe heater selected by octal command 152 receives high power excitation and dissipates 500 milliwatts of power. The thermal conductivity is determined by measuring the temperature rise at the ring bridge nearest the selected heater. The temperature rise per unit of time at the known distance is the measure of thermal conductivity of the surrounding material. The high conductivity measurements are heat gradients in the

high sensitivity range and probe ambient temperature. The bridge used in performing a measurement is determined by the heater selected.

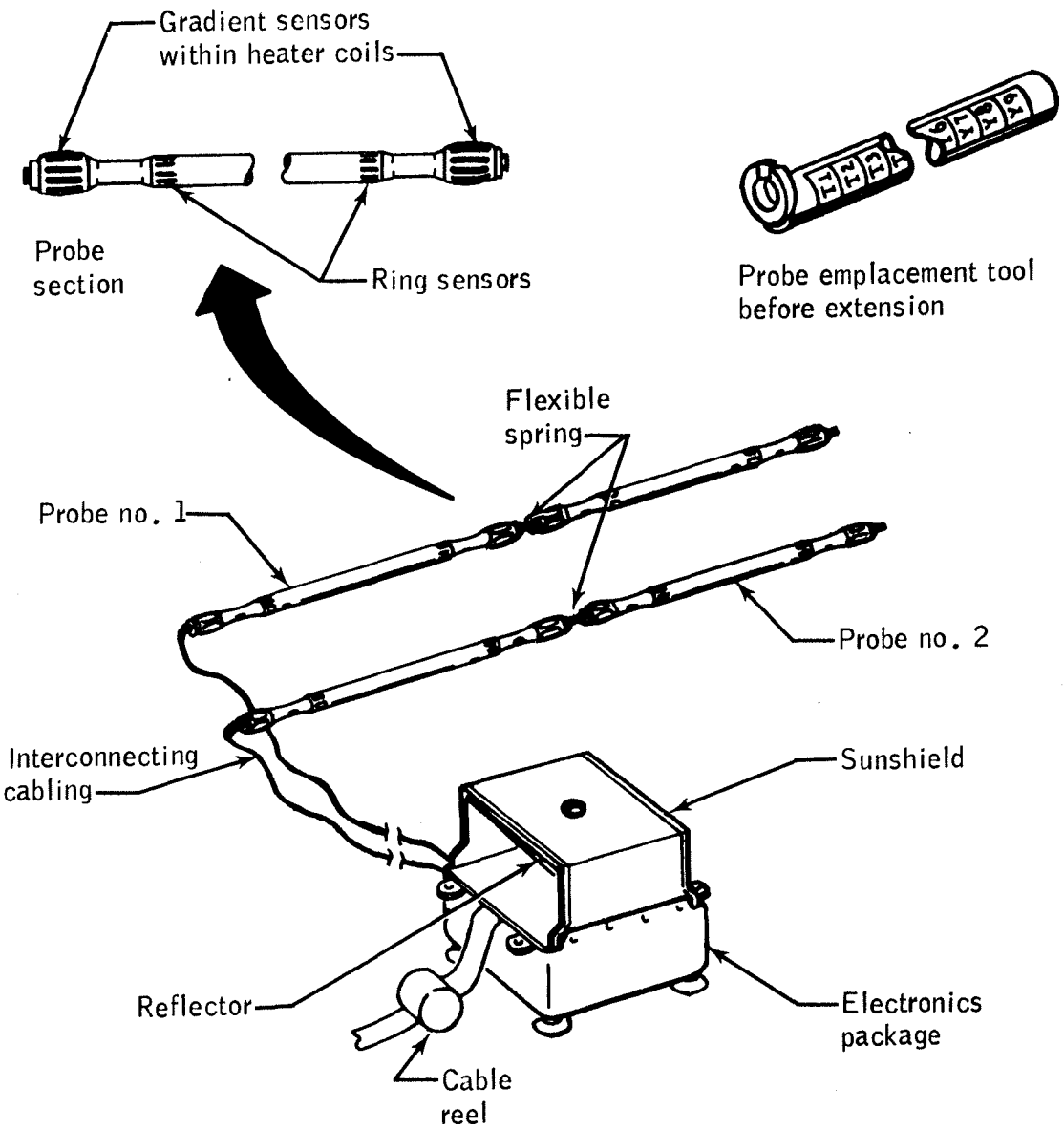

Figure 9-2. - Heat flow experiment.

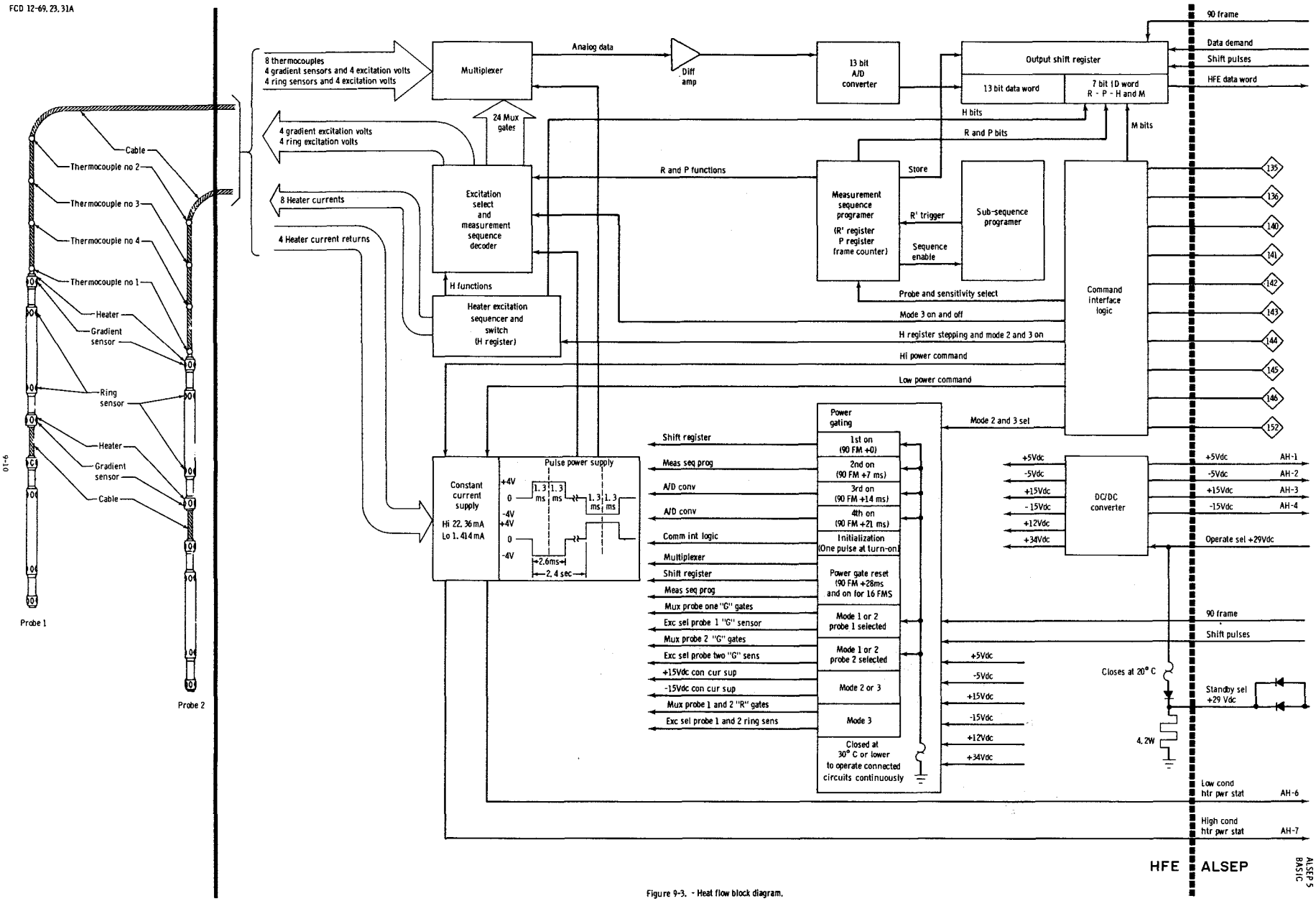

Figure 9-3. - Heat flow block diagram.

Measurement sequences for one section of one probe

ΔTH (modes 1 and 2)

1. Meas 1 + pulse P/S
2. Meas 2 + pulse P/S
3. Meas 1 - pulse P/S
4. Meas 2 - pulse P/S

ΔTL (modes 1 and 2)

1. Meas 3 + pulse P/S
2. Meas 2 + pulse P/S
3. Meas 3 - pulse P/S
4. Meas 2 - pulse P/S

Differential temp (mode 3)

1. Meas 4 + pulse P/S
2. Meas 5 + pulse P/S
3. Meas 4 - pulse P/S
4. Meas 5 - pulse P/S

Ambient temp (mode 3)

1. Meas 4 + pulse P/S
2. Meas 6 + pulse P/S
3. Meas 4 - pulse P/S
4. Meas 6 - pulse P/S

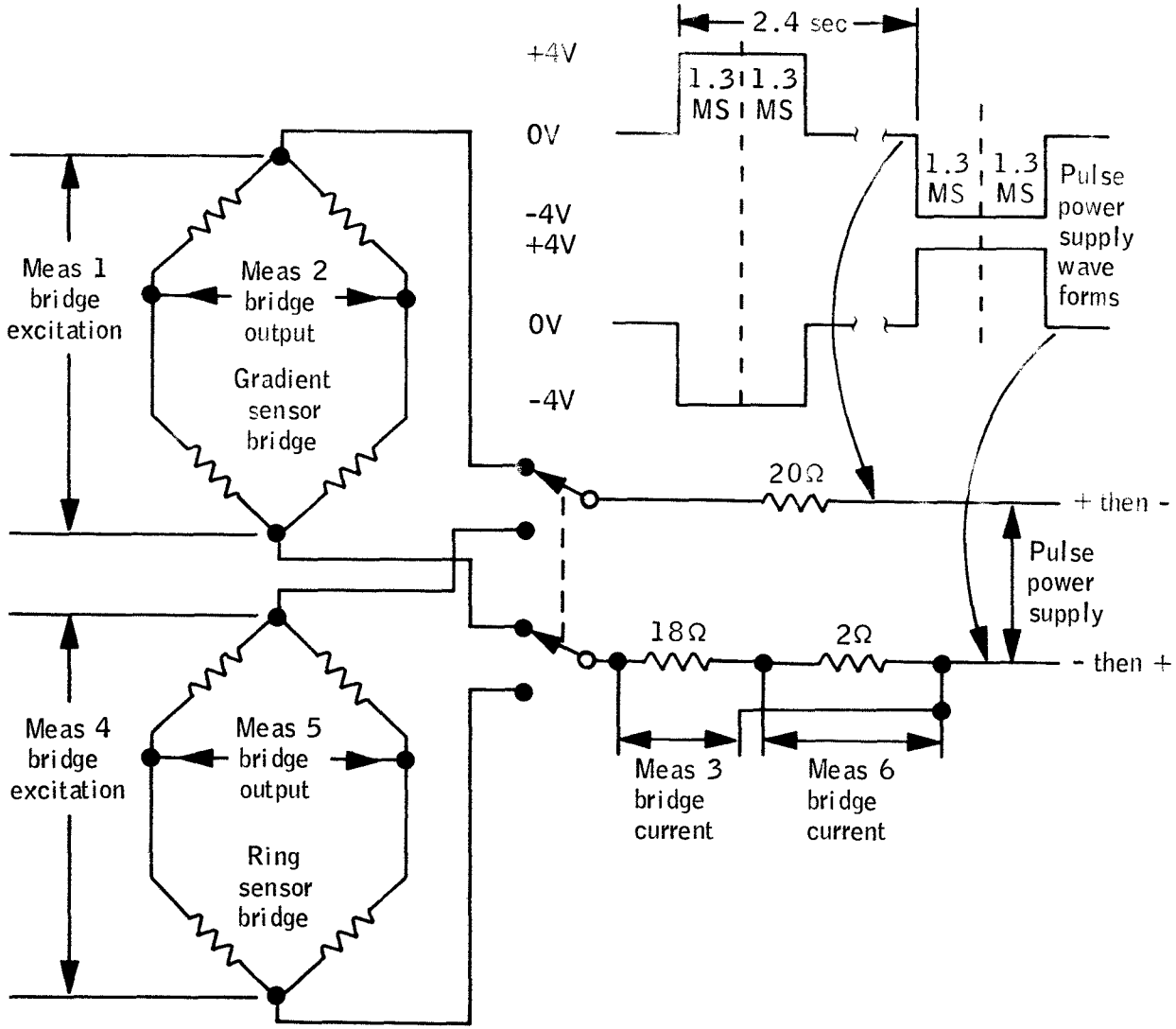

Figure 9-4. - Heat flow probe measurement sequences.

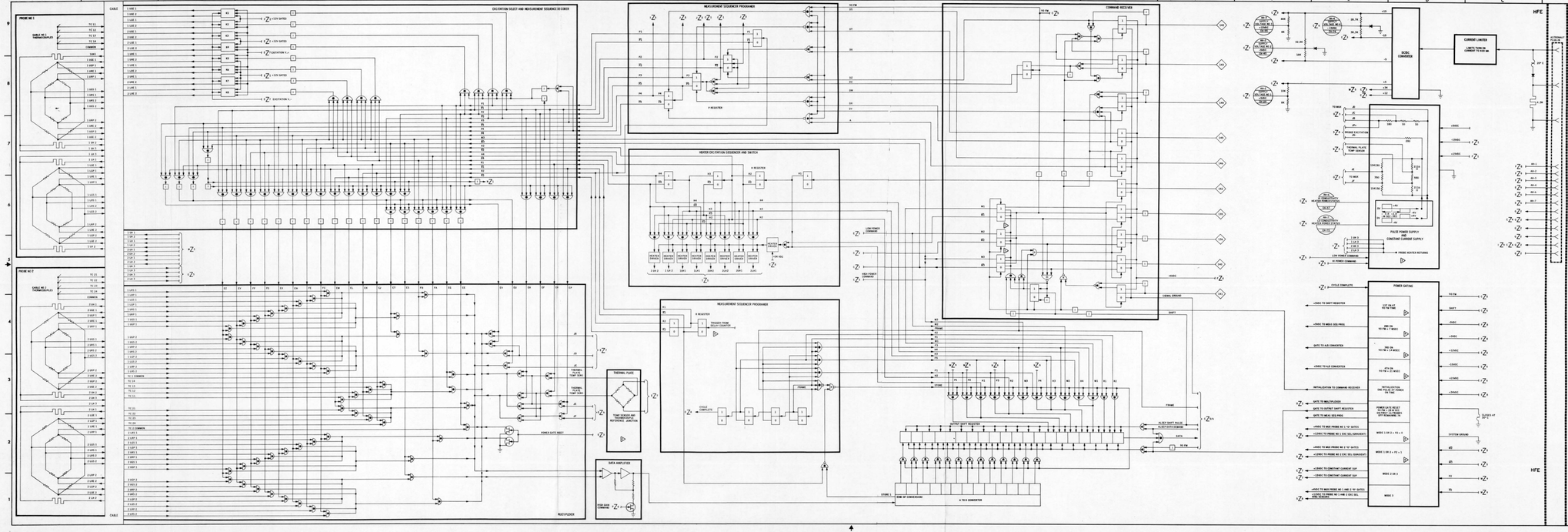
EXCITATION SELECT AND MEASUREMENT SEQUENCE DECODER
MEASUREMENT SEQUENCER PROGRAMMER
HEATER EXCITATION SEQUENCER AND SWITCH
COMMAND RECEIVER
NOISE CONVERTER
CURRENT LIMITER
LIMITS TURN-ON CURRENT TO 1.625 MA
PULSE POWER SUPPLY
CONSTANT CURRENT SUPPLY
POWER SAFING
THERMAL PLATE
TEMP SENSOR AND REFERENCE JUNCTION
DATA AMPLIFIER
POWER GATE RESET
MULTIPLEXER
SEND UP CONVERSIONS
A TO D CONVERTER
HFE
ALSEP
HFE SYSTEM SCHEMATIC
NATIONAL AERONAUTICS & SPACE ADMINISTRATION
GODDARD SPACE FLIGHT CENTER
GREENBELT, MARYLAND
ALSEP-1
J
9:1
SHEET 1 OF 1

SECTION 10

LUNAR SURFACE GRAVIMETER (S207)

10.1 SYSTEM DESCRIPTION

10.1.1 Experiment Objectives

The LSG Experiment objectives are as follows:

A. To utilize the moon as an antenna with which to search for gravitational radiation from cosmic sources, by a search for the lowest frequency free oscillations.

B. To measure the lunar deformation associated with tidal forces in order to obtain information on the internal structure of the moon.

C. To provide vertical axis seismic activity information up to frequencies of 16 cycles per second. P-1

D. To measure the ratio of lunar g to earth g.

This experiment will measure the value of lunar gravity and its temporal variations as a function of time. The average absolute value of lunar gravity will be determined to an accuracy of one part in 10^5. Variations in lunar gravity as small as one part in 10^8 (i.e., approximately ±1.6 microgals) will be detected.

Long-period variations (e.g., one cycle per several days or longer) will enable the determination of the magnitude of lunar surface deformation due to tidal (i.e., external gravitational forces). Conclusions may then be drawn concerning the internal constitution of the moon.

Short-period variations of about 0.2 Hz or greater in lunar gravity (vertical components only) will indicate natural lunar seismicity or free oscillations of the moon which may

be induced by gravitational radiation from cosmic sources. These observations will also make use of the moon as a mass quadrupole detector for gravitational waves. The lunar free oscillations may be observed to be excited by such waves if the power spectrum is sufficiently intense over the frequencies of certain of the moon's normal modes. Simultaneous observation of the earth's normal mode excitation will make it very likely that the effects are due to gravitational waves.

This experiment partly overlaps the lunar passive seismometer experiment in that it yields vertical acceleration and seismic data. The difference is primarily that a different frequency range is covered. These seismic data yield information on the collective motion, and internal constitution of the moon as a whole.

10.1.2 Method of Operation

The sensor is a Short Range, Model D (Lunar) LaCoste and Romberg gravity meter. The gravimeter uses the LaCoste-Romberg type of suspension to sense changes in the vertical component of local gravity. The movement is modified for automatic operation by the addition of a set of capacitor plates. The plates are fixed to the frame of the sensor and geometrically concentric with a third plate of similar size which is attached to the beam of the sensor. The plates are arranged so that the center plate is located exactly between the two outer plates when the beam is exactly horizontal. A null seeking servo system provides an electrostatically generated restoring force to balance the forces and recenter the sensor beam to its reference position equidistant between the two outer capacitor plates. The spring suspension point can be adjusted by means of motor driven micrometer screws (coarse and fine screw servos) and is set up so that the center plate

is zeroed when the input perturbation signal is midway between its extreme values. The sensor mass can also be modified by the addition or removal of small weights allowing extension of the range of the sensor to either earth or lunar operation (Mass Changing Servo System). The major fraction of the force supporting the sensor mass against the local gravitational field is provided by the zero-length spring. Small changes in force tend to displace the beam up or down and this imbalance is sensed by the capacitive displacement transducer system using the relative capacitances between the center plate and the two fixed plates. The error signal generated by this arrangement is passed through an electronic integrator producing a control or feedback signal that is used to provide an electrostatic force which exactly balances the perturbing force and restores the sensor beam to the reference position. The sensor is suspended from a gimbal and is adjusted to compensate for initial deployment leveling errors of the sensor by motor driven tilting system (Tilt Servo System). The sensor beam may be caged or uncaged as required by the caging control motor. P-1

The LSG will have the sensitivity to measure deviations in the lunar surface acceleration of one part in 10^{10} or better. As a design goal, the instrument will measure the ratio of lunar g to earth g with a precision of one part in 10^5.

The accuracy of the LSG in measuring lunar tide amplitude will be 0.1 percent or better. The resolution for individual measurements will be two microgals or better.

10.1.3 Major Components

The gravimeter experiment consists of four basic components; a LaCoste and Romberg mass spring and level system, sun shade,

thermal control box, and an electronics package. The LaCoste and Romberg mass spring and level system and electronic package will be placed inside of the thermal control box. The gravimeter electronics accepts the signal provided by the sensor, amplifies and conditions the signal, and feeds it back as a correction to the sensor. Three voltages are measured. One is proportional to the instantaneous servo error voltage. |P-1
This is the seismic output. The second voltage is the servo-voltage required to restore the mass to its equilibrium position. This measures the lunar tide. The third voltage is the amplified output of a high pass tidal frequency cutoff filter. When Fourier analyzed, this voltage will give information on the lunar free oscillations for searching gravitational radiation.

Outputs are provided in three band pass ranges:

A. Tidal dc to one cycle/minute
B. Free oscillation two cycles/minute to one cycle/20 minutes
C. Seismic; 0.05 cycles to 16 cycles/second |P-1

10.1.3.1 Gravimeter sensor physical description.- The LaCoste and Romberg gravimeter sensor is enclosed in a rectangular metal box with heater wires embedded in the four sides of the box.

A control thermistor is mounted on one side surface of the heater box and the temperature is held constant by a power control circuit using the thermistor signal. Therefore, the heater box is the basic source of the constant sensor temperature. The heater box cover serves as the sensor mount and as the base plate for the screw drives and arrestment gear trains.

The heater box is suspended in a sealed instrument housing which is evacuated to a nominal pressure of 10 torr. The heater box is cantilevered from the instrument housing cover

by four fiberglass straps, which therefore provide conductive thermal isolation between the heater box and instrument housing. The straps are pinned both on the instrument housing cover side and heater box side to ensure the precise alignment required. Mounted on the unsealed side of the instrument housing cover is the electronics package.

Mounted on the outside of the heater box are the motors for sensor beam position adjustment, mass changing (adding or deleting weight from the beam pan as required for lunar or earth operations respectively), and adjustment of the center of gravity of the gimbal suspended mass for vertical alignment. A pressure sensor is located in the instrument housing cover for monitoring internal pressure. Power and signal connections to pressure sensor and heater box pass through hermetically sealed connectors in the instrument housing cover.

The total sensor package and electronics assembly is suspended from a gimbal for self-leveling on the moon. Fine adjustment is made by the tilt motors as described above. The gimbal can adjust greater than three degrees in all directions without interference between the instrument housing and inner container. For launch and lunar transit the gimbal is locked and the entire suspended mass and gimbal is depressed into the cones between the inner and outer containers with a load of 1200-2000 pounds.

The entire suspended mass is enclosed in a container which is composed of insulation between aluminum shells. From the bottom of the outer container, project four feet which are used for lunar emplacement. The top has a cavity and thermal radiator, gimbal actuator mechanism, bubble level, UHT socket, and the sunshield with its tilt mechanism, tilt indicator, and detents for locking in a tilted position. On the side of the

outer container is a bracket which retains the cable spool until deployment.

The sunshield is a five element mechanism which has the following functions:

A. Prevents direct solar radiation on the cavity
B. Provides a means to mount the entire instrument to the ALSEP support structure
C. Transmits the locking load of 1200-2000 pounds

The inner surfaces which "see" the cavity are aluminum insulated from other portions of the sunshield by a layer of silk and thereby maintain a relatively cold temperature. At the lower ends of the outer sunshield are guide cups and mounting holes for the Boyd bolts. The hinge between the inner and outer sunshield element is a slotted joint such that when the Boyd bolts on one side are released all load goes out.

The top element of the sunshield has an astronaut handle attached to facilitate sunshield deployment. This handle is hinged to fold down flat during transit and not violate the allowable envelope. Strain gages near the Boyd bolt locations are used to determine when load produced by the Boyd bolts is appropriate. Essentially this device indicates the deformation of the upper sunshield element and is calibrated to the proper limits. | P-1

10.1.4 Commands and Telemetry

The LSG electronic package outputs 36 ten-bit, serial NRZ-C digital words to the data processor with the telemetry frame format (frame length 32/53 sec). A demand line signal is given for each ten-bit readout and the digital bits are shifted out serially with the most significant bit first. The sampling sequence in the 64-word ALSEP telemetry frame | P-1

is as indicated in Figure 10-1. The digital data pulse has the following characteristics:

Amplitude -	Logical One	+2.4 volts to +5.5 volts
	Logical Zero	0 to +0.4 volts
Rise and Fall Time -		>2 microseconds, <10 microseconds at the 10 and 90% points
Repetition Rate -		1060 pulses/second normal rate, nominal 530 pulses/second slow rate, nominal

On special command the screw servo encoders are sampled as shown in Figure 10-1 and below: |P-1

	Samples per frame	Bits per sample	Bits per frame
Coarse encoder (MSB)	7	9	63
Coarse encoder (LSB)	11	10	110
Fine encoder (MSB)	6	9	54
Fine encoder	12	10	120

|P-1

The screw servo mode provides encoder readout. Since the shaft encoders are 19-bit encoders, the first LSG data word provides the nine most significant bits of the coarse encoder, the second word gives the 10 least significant bits of the coarse encoder, the third word provides the nine most significant bits of the fine encoder, and the fourth word gives the 10 least significant bits of the fine encoder. This information is repeated as shown in Figure 10-1. The additional bit available for both coarse and fine encoder is not used. |P-1 |P-1

In addition, ten analog signals are routed over the analog lines to the Central Station. Once each 90 frames these signals are sampled to provide engineering data and also serve as backup for prime science data. These analog words are multiplexed into ALSEP main frame word 33 and utilize ALSEP frame count as shown in Figure 10-2. |P-1

NORMAL MODE

1 C	2 C	3 C	4 G	5	6 G	7	8 G
9	10 G	11	12 G	13	14 G	15	16 G
17	18 G	19	20 G	21	22 G	23	24 G
25 TIDE	26 G	27 FREE MODE	28 G	29 TEMP	30 G	31	32 G
33 H. K.	34 G	35 STATUS 1	36 G	37 STATUS 2	38 G	39	40 G
41	42 G	43	44 G	45	46 G	47	48 G
49	50 G	51	52 G	53	54 G	55	G
57	58 G	59	60 G	61	62 G	63	64 G

SHAFT ENCODER MODE

C	C	C	COARSE ENCODER MSB		COARSE ENCODER LSB		FINE ENCODER MSB
	FINE ENCODER LSB		COARSE ENCODER MSB		COARSE ENCODER LSB		FINE ENCODER MSB
	FINE ENCODER LSB		COARSE ENCODER MSB		COARSE ENCODER LSB		FINE ENCODER MSB
FINE ENCODER LSB	FINE ENCODER LSB	FINE ENCODER LSB	FINE ENCODER LSB	FINE ENCODER LSB	FINE ENCODER LSB		FINE ENCODER LSB
H. K.	COARSE ENCODER MSB	COARSE ENCODER LSB	COARSE ENCODER LSB	COARSE ENCODER LSB	COARSE ENCODER LSB		COARSE ENCODER LSB
	FINE ENCODER MSB		FINE ENCODER LSB		COARSE ENCODER MSB		COARSE ENCODER LSB
	FINE ENCODER MSB		FINE ENCODER LSB		COARSE ENCODER MSB		COARSE ENCODER LSB
	FINE ENCODER MSB		FINE ENCODER LSB		COARSE ENCODER MSB		COARSE ENCODER LSB

ALSEP DATA FRAME CONTAINS 64 10-BIT DATA WORDS
C = ALSEP CONTROL WORDS (3 PER FRAME)
G = LSG SEISMIC DATA (31 WORDS PER FRAME)
H. K. = HOUSEKEEPING (INCLUDING 10 LSG PARAMETERS)
COMMUTATED ONCE EVERY 90 ALSEP FRAMES

Figure 10-1.- LSG digital data formats.

The contents of the digital status words (ALSEP main frame words 35 and 37) are also shown in Figure 10-2.

Seven command lines are provided to the LSG. Four command functions are generated directly via the conventional ALSEP uplink command techniques. These are:

A. Instrument housing heater power ON
B. Instrument housing heater power OFF
C. Command decoder power ON
D. Command decoder power OFF

The remaining three command lines are used to step the command counter (up or down) and to generate a command execute function.

The "COMMAND DECODER POWER ON" resets the command counter to the 00000 state. A down count of one will set the command counter to the 11111 state. An up count or down count will increase or decrease the counter by a count. The command counter is stepped to its desired state by transmitting a series of up or down commands. In every ALSEP main frame, word verification that the command was loaded correctly is made via the command status word. The command decoded from the five bit register is executed upon receipt of the "COMMAND EXECUTE." The command register is changed by transmitting the required number of up or down counts. The counter will reset if the "COMMAND DECODER POWER ON" command is transmitted. P-1

Prior to driving the tilt or mass change servo motors or the sensor caging motor, the "INSTRUMENT HOUSING HEATER POWER OFF" (slave heater) command must be transmitted. This procedure is required in order to minimize the thermal disturbance by minimizing the peak power dissipation within the experiment. P-1

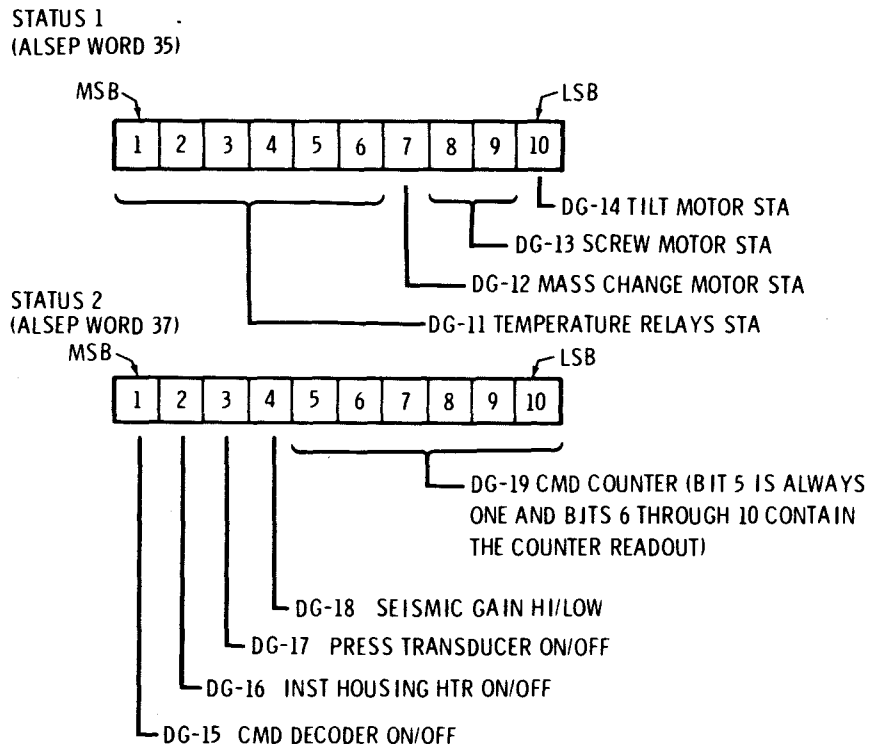

HOUSEKEEPING (ALSEP WORD 33)

ALSEP FRAME NO.	CODE	PARAMETER
10	AG-02	LSG TIDE *
23	AG-03	LSG FREE MODE *
24	AG-07	LSG OSCILLATOR AMPLITUDE
38	AG-08	LSG +15 VOLTS
39	AG-01	LSG SEISMIC *
53	AG-09	LSG -15 VOLTS
54	AG-06	LSG MASS CHANGE POSITION
68	AG-04	LSG SENSOR TEMPERATURE
69	AG-10	LSG +5 VOLTS
89	AG-05	LSG PRESSURE

* SCIENCE DATA READ OUT IN ANALOG HOUSEKEEPING CHANNELS

HOUSEKEEPING PARAMETERS ARE READ OUT ONCE EVERY 90 ALSEP FRAMES (ONCE EVERY 54 SECONDS AT NORMAL DATA RATE)

Figure 10-2.- LSG status and engineering data.

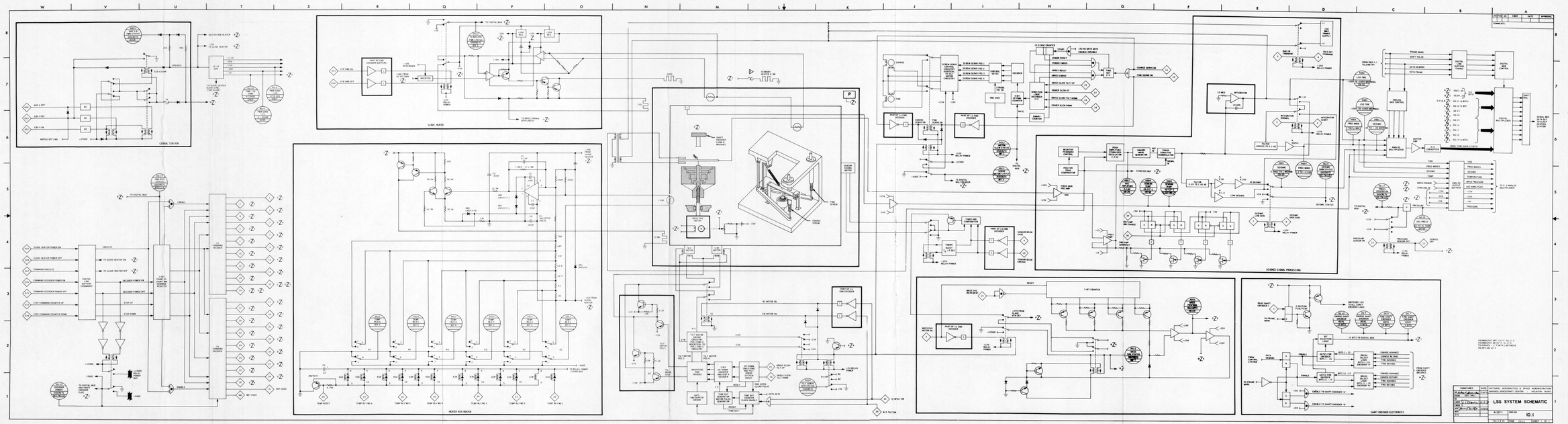
GENERAL TORQUE
SLAVE HEATER
HEATER BOX HEATER
SCANNER, MIRROR, IN
SHAFT ENCODER ELECTRONICS
SCIENCE SIGNAL PROCESSING
1-STAGE DIVIDER
1-STAGE DIVIDER
1-BIT COUNTER
LSS SYSTEM SCHEMATIC
NATIONAL AERONAUTICS & SPACE ADMINISTRATION
GODDARD SPACE FLIGHT CENTER, GREENBELT, MARYLAND
10.1
ALSEP 3
SHEET 1 OF 1

SECTION 11
LUNAR SEISMIC PROFILING EXPERIMENT (S203)

11.1 SYSTEM DESCRIPTION

11.1.1 Experiment Objectives

The primary function of the Lunar Seismic Profiling (LSP) Experiment is to determine lunar surface and near-surface response to artificial seismic waves in the 3 to 20 Hz range. The LSP can also be used to monitor natural seismic phenomena.

The objectives of the LSP experiment are to further the understanding of the origin of the primordial lunar surface, study the type and character of the surface and near-surface rock, study the relationship between mare and highland areas, and study the degree of induration and bearing strength of the lunar surface.

11.1.2 Method of Operation

Seismic waves are artificially produced by eight Explosive Packages that are deployed by the crew during all three EVA's and detonated by timers and commands. These seismic waves are detected by four geophones that have been deployed by crew during the first EVA. By varying the location and magnitude of the explosions with respect to the geophones, penetration of the seismic waves to depths of approximately 3 Km can be achieved, and wave velocities through several layers of subsurface materials can be investigated.

11.1.3 Major Components

The seismic detectors are four identical geophones placed at the three corners of an equilateral triangle, 300 feet on a side, and at the centroid. The geophones are electromagnetic transducers which translate vertical seismic motion into electrical signals.

The seismic waves are produced by eight Explosive Packages (EP) ranging in size from 1/8 to 6 pounds of TNT equivalent which are deployed from 0.16 to 2.40 Km from the geophone array. Each EP is activated by the timing out of two timers and by the reception of coded fire pulses produce by the LSP electronics located at the central station.

11.1.4 Commands and Telemetry

The LSP experiment uses five commands:

CMD 156	LSP PULSES ON
CMD 162	LSP PULSES OFF
CMD 163	LSP GAIN NORM
CMD 164	LSP GAIN LOW
CMD 170	LSP GEO CAL.

Three commands are used to effect power distribution to the LSP electronics. One command places the data subsystem in the LSP formatting mode. Four channels of seismic data generated by the LSP and 11 channels of engineering data will be converted into digital form within the experiment. A 30-bit digital word format and a 3533.3 bit/sec data rate will be used by the LSP experiment to insure accurate encoding and transmission of critical, real-time event data and to provide a data handling capability for the seismic data. The higher bit rate and longer word length are in compatible with the normal ALSEP format and preclude the usual data collection from the other experiments during the time the LSP formatting mode is activated.

11.2 FUNCTIONAL DESCRIPTION

The LSP comprises the Explosive Packages (8), geophone module, geophones (4), remote transmitting antenna, central electronics, and interconnecting cabling. Figure 11-1 illustrates the LSP major components.

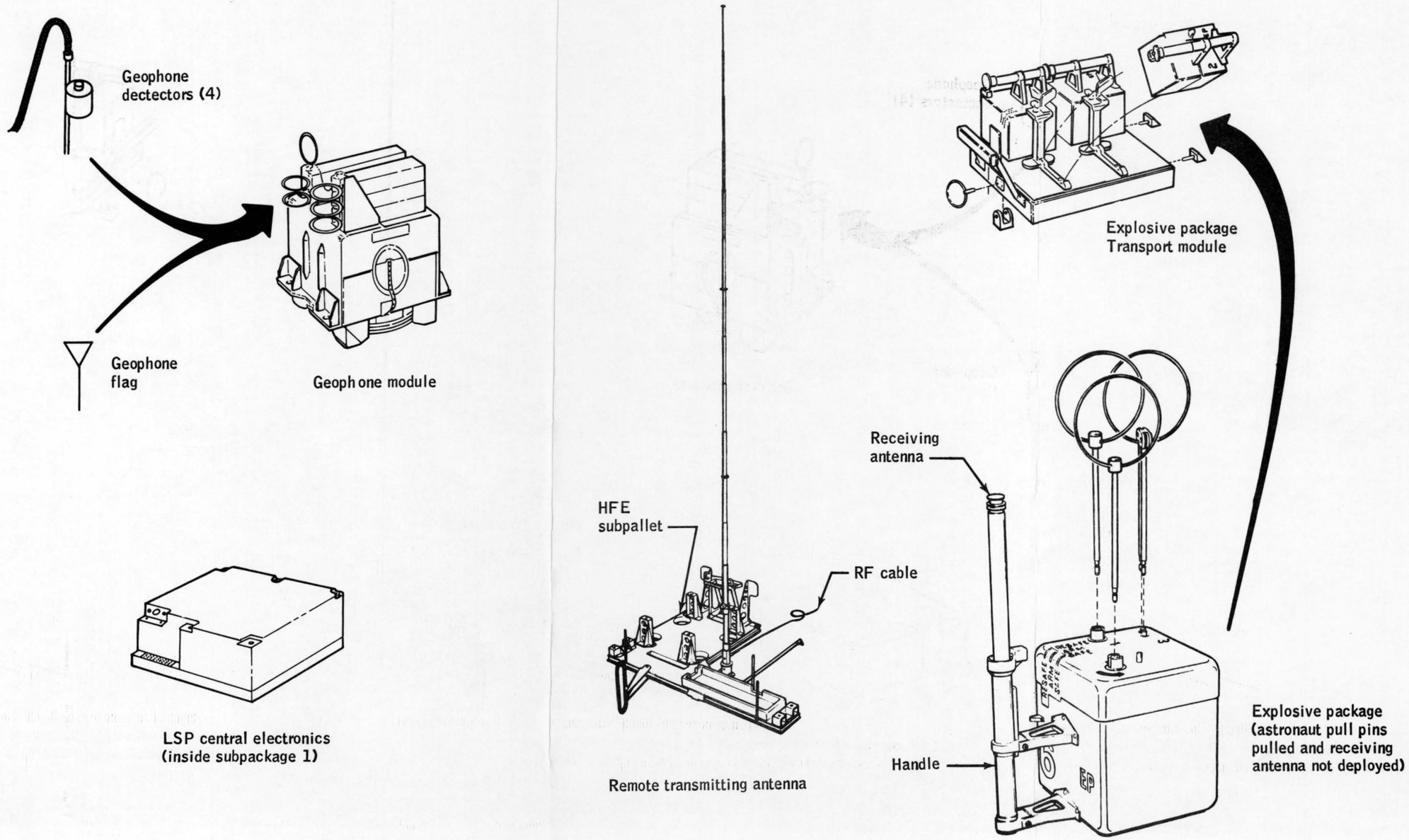

Figure 11-1.- LSP major components

11.2.1 Geophone Module and Geophones

The geophone module is removed from subpackage 1 and placed 30 feet south of the central station. The four geophones are deployed according to the following table:

Geophone	Deployment location with respect to the Geophone Module
1	150 feet East
2	150 feet West
3	80 feet South
4	260 feet South

The four identical geophones are electromagnetic devices which translate physical surface or subsurface movement into electrical signals. The amplitude of the output signals is proportional to the rate of physical motion.

11.2.2 Explosive Packages

There are eight explosive packages (two 1/8 lb., two 1/4 lb., and one each of 1/2 lb., 1 lb., 3 lb., 6 lb. TNT equivalent explosive packages).

Two groups of four charges each are carried on the back of the LRV on explosive package transport modules. The two transport modules are flown on the QUAD III payload pallet.

The explosive packages are deployed by the astronauts on each of the three EVA's. To deploy an explosive package the receiving antenna is extended its full length (approx 5 ft), three pull rings are removed, and the EP is lowered to the lunar surface using the receiving antenna.

11.2.3 LSP Remote Transmitting Antenna and Transmitter

The LSP remote transmitting antenna (height = 69") will be erected 37 feet NW of the ALSEP central station using the HFE pallet as the base. The transmitter uses a pulsed carrier-wave type transmission at a frequency of 41.2 MHz with a peak power of 40 watts. When the LSP is commanded ON, the transmitter is on and produces a very low output.

Execution of the "pulses on" command (CMD 156) causes the following signals until the "pulses off" command (CMD 162) is received (refer to DWG. 11.1):

A. AGC pulse-one pulse for 0.288 millisec every LSP subframe, every 169.3 millisec.

B. Coded fire pulses - three pulses of 0.566 millisec each, 0.849 millisec apart, every 29.55 seconds.

Reception of the coded fire pulses is necessary for explosive package detonation upon time-out of both timers.

11.2.3 LSP Central Electronics

The central electronics is located in the central station and contains the transmitter circuitry for power control, temperature sensing, geophone calibration, signal conditioning, and data handling. (Refer to Drawing 11.1).

11.2.3.1 Power control.- Operating power is supplied from the ALSEP electrical power system via the power switching relays in the PDU (refer to Drawings 4.2 and 11.1). The operating power of +29 VDC is supplied to the LSP power converter which supplies +28 VDC, +12 VDC, +5 VDC, and -12 VDC to the LSP electronics. RTC's provide the means control the LSP to OPERATE, STANDBY, or OFF. There is no standby power connected to the LSP electronics; therefore, standby is essentially an off condition.

Astro switch 2 is in the operate power line and must be rotated clockwise by the astronaut at the end of ALSEP deployment. Overloading the +29 VDC operate bus will cause CB-01 (510-630 MA) to transfer the LSP to STANDBY. The CB placing LSP in STBY is reset when LSP goes to STBY.

11.2.3.2 Temperature sensing.- There is one temperature sensor located in the LSP central electronics (AP-01) to provide temperature data in the DP formatting mode. In the LSP formatting mode temperature data is provided by temperature sensor DP-14.

11.2.3.3 Calibration.- The calibration system is activated by a geophone calibrate command (CMD 170) applied to the command logic by the ALSEP command decoder. The calibrate command is gated to the calibration circuitry where a pulse is applied to the calibrate driver, electrically exciting the geophones. A geophone calibrate pulse is also applied to the data handling system from the calibrate driver indicating receipt of the calibrate command.

11.2.3.4 Data handling.- There are 16 analog data channels in the LSP. They are 4 geophone outputs, 3 calibration measurements, 2 engineering measurements, 6 ALSEP housekeeping measurements, and 1 spare channel. These analog signals are multiplexed, converted to digital signals, and formatted for shifting to the central station data subsystem for transmission. Prior to shifting status, sync, and subframe ID flag bits are added to the data.

The LSP data format consists of twenty 30-bit words in each subframe and three subframes in each LSP mainframe of data. The first word of each subframe contains 10 bits of subframe sync (DP-17) and 5 bits of each geophone data (DP-1, DP-6,

DP-11, and DP-16). The remaining 19 words of each subframe have 7 bits of each geophone data and the remaining two bits are used to multiplex the remaining measurements (refer to Drawing 6.2).

11.3 EXPLOSIVE PACKAGE OPERATION

Each explosive package operates exactly like the other EP except that the timers are set to time-out at different times according to the following chart:

Detonation Time (HR)	Safe/Arm Slide to Arm (HR) (Tn)	Thermal Battery on (HR)	Safe/Arm S Slide to Resafe (HR)
91	90	91	92
92	91	92	93
93	92	93	94
94	93	94	95

All times are with respect to EP pull ring removal. By deploying the explosive packages at different times throughout three EVA's, three periods of LSP activity are created (refer to Table 11-1).

Three astronaut pull rings are removed when the EP is deployed. Pull ring 1 enables the Safe/Arm (S/A) Timer. The S/A timer allows the S/A slide to move to the ARM position at time Tn. If the EP does not detonate, the S/A timer allows the S/A slide to move to the RESAFE position at time Tn + 2 hours (refer to Figure 11-2 - Explosive Package Functions.).

Pull ring 2 enables the safe/arm slide plate to move to the right as shown in figure 11.2. The movement of the S/A slide plate is controlled by the S/A slide timer. In the SAFE and

TABLE 11.1.- TYPICAL LSP EP DEPLOYMENT PLAN*

EP No.	Charge size, lb	Transport module	Deployment distance from ALSEP, km	Deployment time		Detonation time after deployment, hr	Detonation time after LM lift-off, hr:min
				EVA	hr:min into EVA		
6	1	2	1.3	1	4:21	91	24:18
5	3	2	2.0	1	5:55	92	26:52
7	1/2	2	0.8	1	6:11	93	28:08
4	1/8	2	0.16	2	0:56	91	43:23 (48:27) TEI
1	6	1	2.4	2	5:18	92	48:45
8	1/4	1	0.25	2	6:13	94	51:40
2	1/4	1	0.25	3	6:00	93	74:42
3	1/8	1	0.16	3	6:45	94	76:27

*Based on the following mission times:

Landing	112:59 GET	Start EVA 3	163:30 GET
Start EVA 1	116:45 GET	LM lift-off	187:48 GET
Start EVA 2	139:15 GET	TEI	236:15 GET

- SAFE/ARM TIMER ARMS EXPLOSIVE PACKAGE ≈ 90 HOURS AFTER DEPLOYMENT
- THERMAL-BATTERY TIMER ACTIVATES BATTERY TO SUPPLY PWR TO RECEIVER, SIGNAL PROCESSING, AND FIRING CIRCUIT ≈ 91 HOURS AFTER DEPLOYMENT
- EXPLOSIVE PACKAGE DETONATES UPON RECEIVING CODED RF SIGNAL FROM LSP CENTRAL ELECTRONICS IF SAFE/ARM SLIDE PLATE IS IN POSITION AND THERMAL BATTERY IS ACTIVATED
- SHORTING SWITCH ON END DETONATING CARTRIDGE IS OPENED BY ROLLER ENGAGEMENT WITH SAFE/ARM SLIDE PLATE

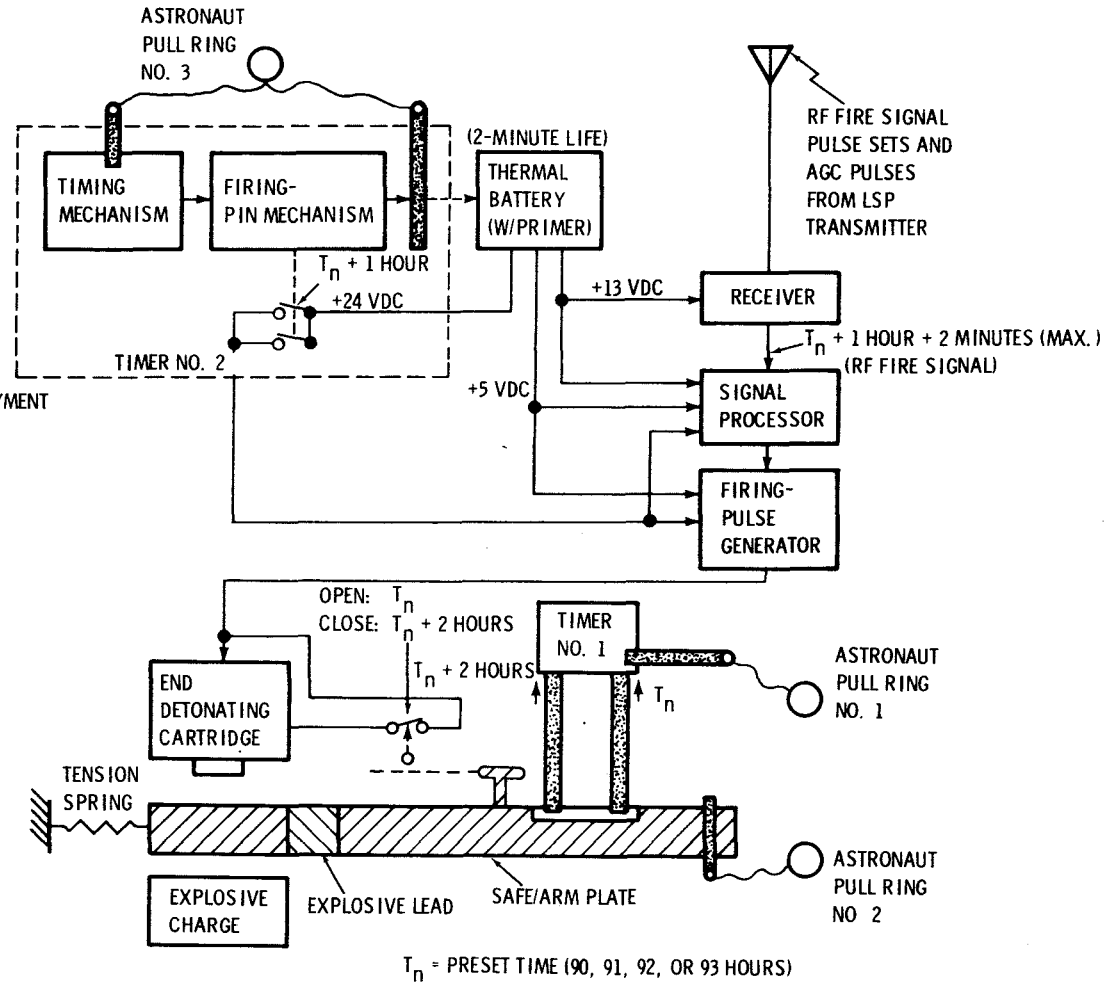

Figure 11-2.- LSP explosive package functions.

RESAFE positions the end detonating cartridge (EDC) is shorted and an insulation is between it and the explosive charge. In the ARM position the EDC is not shorted and an explosive lead is between it and the explosive charge.

Pull ring 3 enables the thermal battery timer and the firing pin mechanism. The thermal battery timer times-out at Tn + 1 hours allowing the firing pin to activate the thermal battery by striking it. The thermal battery supplies power to receiver, signal processor, and firing pulse generator for approximately two minutes. Upon time-out of the thermal battery timer, a redundant pair of microswitches close to allow +24 Vdc to be supplied to the signal processor and firing pulse generator. (Refer to Drawing 11.2 LSP Explosive Package.)

In addition to the time-out of the S/A timer to the ARM position (Tn hours) and the thermal battery timer (Tn + 1 hours), the LSP transmitter coded fire pulses must be received during the 2 minute life of the thermal battery. The LSP fire pulses are sent in groups of three by the LSP central electronics every 29.55 seconds after CMD 156 and until CMD 162 is sent to stop the fire pulses.

11.4 SAFETY FEATURES

11.4.1 LSP Central Electronics

Astronaut switch 2, when in the CCW position open circuits the +29 volt operate power to the LSP electronics. Astro switch 2 is rotated CW at the conclusion of ALSEP deployment. CMD 003 LSP Formatting ON, and CMD 156, LSP Transmitter Pulses ON, must have been received to allow EP detonation.

11.4.2 Explosive Packages

There are eight safety features associated with each explosive package. The safety features are listed below:

A. Three independent events occur for detonation (Figure 11.2)
   - Time-out of safe/arm slide timer
   - Time-out of battery timer
   - Radio reception of coded fire pulses

B. Timer pins lock if timer starts inadvertently (Astronaut Pull Rings 1 and 3).

C. Firing pin pull pin locks to prevent initiating thermal battery if the battery timer runs out prior to deployment. (Astronaut Pull Ring 3).

D. The safe/arm slide pull pin locks to prevent the slide from moving if the safe/arm timer runs out prior to deployment. Movement of slide will lock pull pin. (Astronaut Pull Ring 2).

E. The safe/arm slide when in the safe position prevents propagation of the explosive train detonation by shorting the detonator assembly (Figure 11-2).

F. The microswitch in the battery timer open circuits the signal processor and firing pulse generator power lines (Figure 11.2).

G. The firing capacitors discharge through leak resistors if firing signal is not received within 3 minutes of thermal battery activation (Drawing 11.2).

H. If the explosive package is not detonated with two hour safe/arm slide window, the slide will move to the resafe position (Figure 11-2).

These safety features are summarized on the explosive charge safety matrix (Figure 11-3).

ACTIVITIES	SAFETY FEATURES								
	Astro switch No. 2 (CW enables +29V to LSP electronics)	Safe/arm slide timer enable	Safe/arm slide enable	Battery timer enable	LSP operate selected (CMD 055)	LSP transmitter pulses enable (CMD 156)	LSP formatting on (CMD 003)	Time-out of safe/arm slide timer	Time-out of battery timer
Deployment - C/S	S	S	S	S	S	S	S	S	S
Deployment - Geophones	S	S	S	S	S	S	S	S	S
Astro Switch No. 2 CW		S	S	S	S	S	S	S	S
Deployment of charges:									
Astronaut pull ring No. 1			S	S	S	S	S	S	S
Astronaut pull ring No. 2				S	S	S	S	S	S
Astronaut pull ring No. 3					S	S	S	S	S
Postsurface operation: LM ascent						S	S	S	S
Charge detonation period: LSP transmitter pulses ON							S	S	S
LSP formatting ON								S	S
Safe/arm slide to ARM									S
Thermal battery ON									

LEGEND

S = Safe condition
Blank = Fire condition

Figure 11.3.- Explosive charge safety matrix

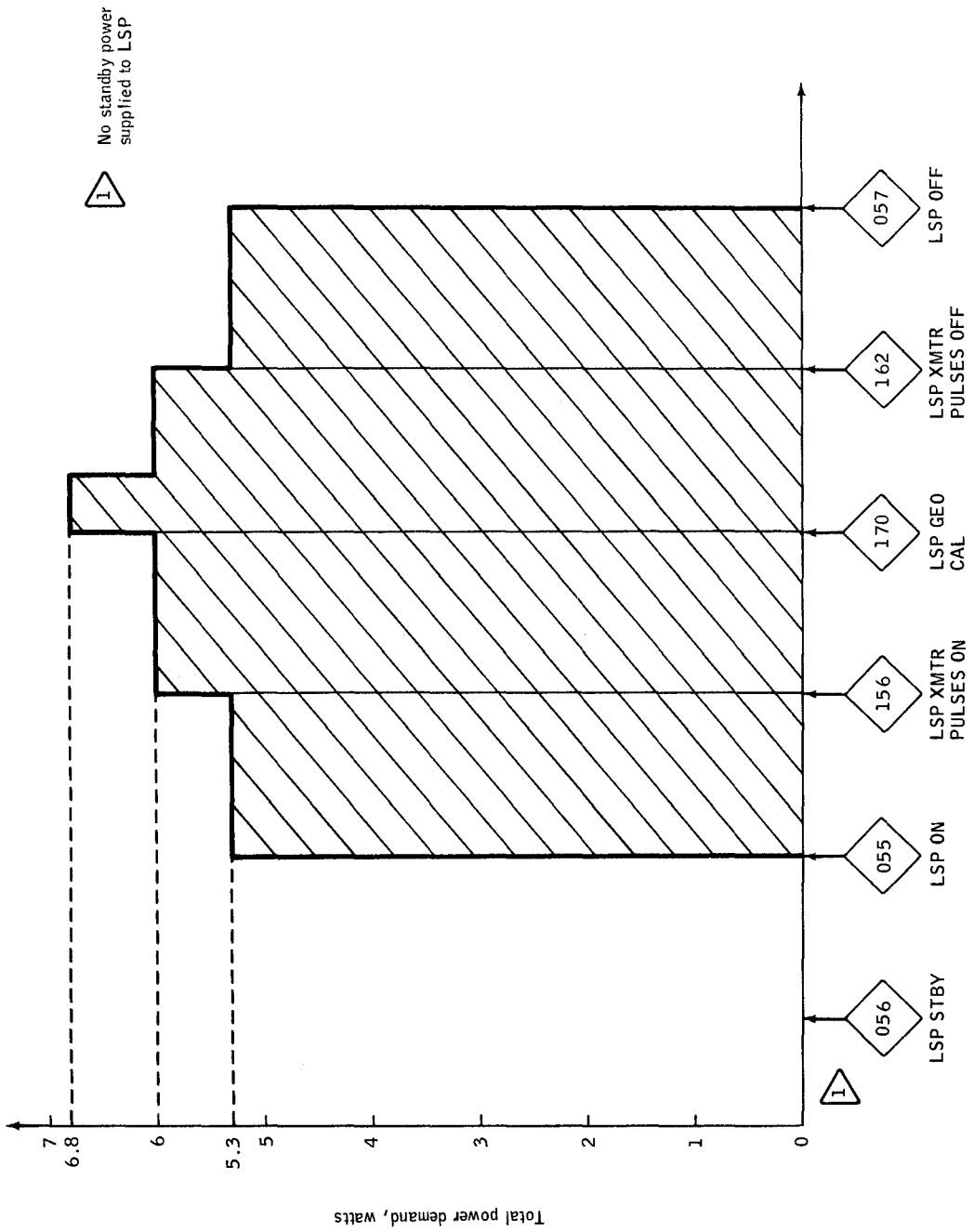

Figure 11-4.- LSP power profile.

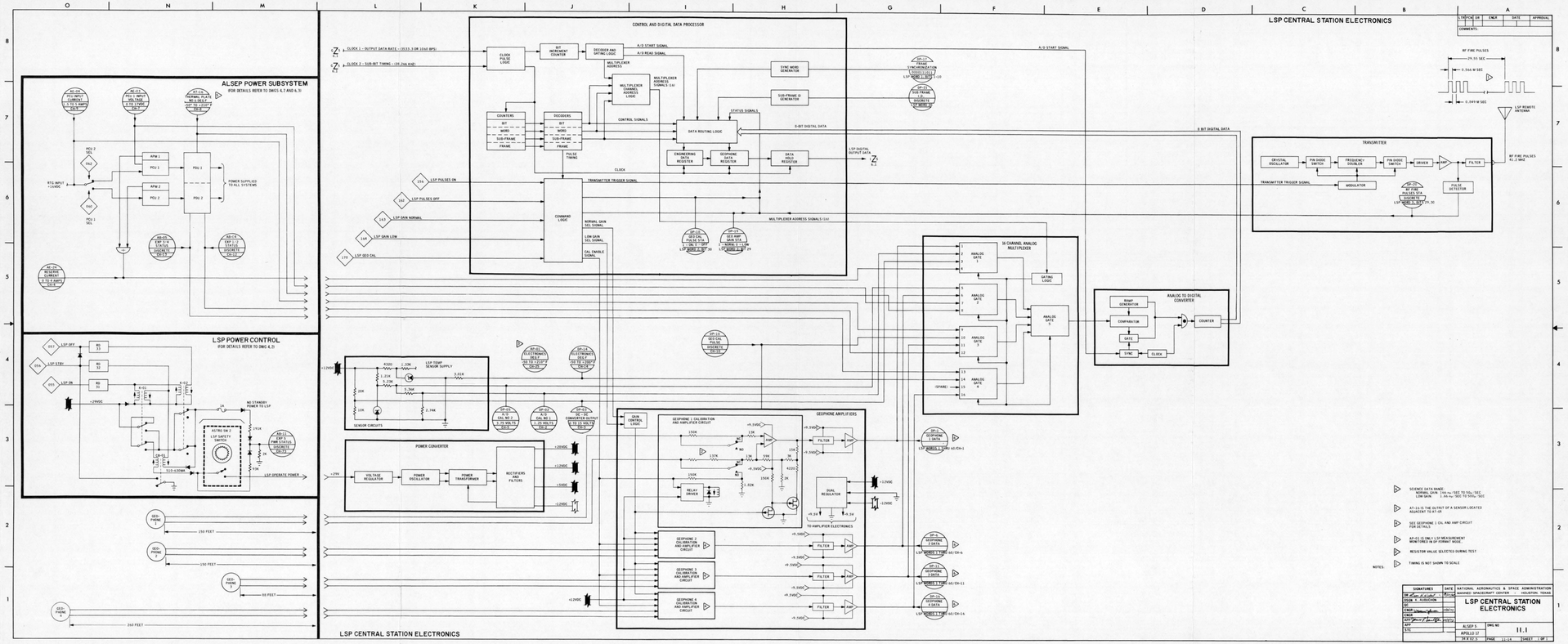
LSP CENTRAL STATION ELECTRONICS
ALSEP POWER SUBSYSTEM
(FOR DETAILS REFER TO DWGS 4, 7 AND 6, 3)
LSP POWER CONTROL
(FOR DETAILS REFER TO DWG 6, 3)
CONTROL AND DIGITAL DATA PROCESSOR
CLOCK 1 - OUTPUT DATA RATE - (0.53-3.0M 1050 BPS)
CLOCK 2 - SUB-BIT TIMING - (20.246 KHZ)
CLOCK PULSE LOGIC
BIT INCREMENT COUNTER
DECODER AND DATING LOGIC
A/D START SIGNAL
A/D READ SIGNAL
MULTIPLEXER ADDRESS
MULTIPLEXER CHANNEL ADDRESS LOGIC
MULTIPLEXER ADDRESS SIGNALS (16)
COUNTERS
DECODERS
CONTROL SIGNALS
STATUS SIGNALS
DATA ROUTING LOGIC
8-BIT DIGITAL DATA
ENGINEERING DATA REGISTER
GEOPHONE DATA REGISTER
DATA DATA REGISTER
SYNC WORD GENERATOR
SUB-FRAME ID GENERATOR
LSP DIGITAL OUTPUT DATA
CLOCK
TRANSMITTER TRIGGER SIGNAL
COMMAND LOGIC
NORMAL GAIN SEL SIGNAL
LOW GAIN SEL SIGNAL
CAL ENABLE SIGNAL
LSP PULSES ON
LSP PULSES OFF
LSP GAIN NORMAL
LSP GAIN LOW
LSP GEO CAL
SENSOR CIRCUITS
LSP TEMP SENSOR SUPPLY
POWER CONVERTER
VOLTAGE REGULATOR
POWER OSCILLATOR
POWER TRANSFORMER
RECTIFIERS AND FILTERS
GAIN CONTROL LOGIC
GEOPHONE AMPLIFIERS
GEOPHONE 1 CALIBRATION AND AMPLIFIER CIRCUIT
GEOPHONE 2 CALIBRATION AND AMPLIFIER CIRCUIT
GEOPHONE 3 CALIBRATION AND AMPLIFIER CIRCUIT
GEOPHONE 4 CALIBRATION AND AMPLIFIER CIRCUIT
RELAY DRIVER
FILTER
DUAL REGULATOR
TO AMPLIFIER ELECTRONICS
36 CHANNEL ANALOG MULTIPLEXER
ANALOG GATE 1
ANALOG GATE 2
ANALOG GATE 3
ANALOG GATE 4
GATING LOGIC
ANALOG TO DIGITAL CONVERTER
RAMP GENERATOR
COMPARATOR
GATE
SYNC
CLOCK
COUNTER
TRANSMITTER
CRYSTAL OSCILLATOR
PIN DIODE SWITCH
FREQUENCY DOUBLER
DRIVER
AMP
FILTER
MODULATOR
PULSE DETECTOR
TRANSMITTER TRIGGER SIGNAL
RF FIRE PULSES
29.55 SEC
0.564 M SEC
0.049 M SEC
LSP REMOTE ANTENNA
RF FIRE PULSES 41.2 MHZ
A/D START SIGNAL
8 BIT DIGITAL DATA
SEIS-PHONE 1
SEIS-PHONE 2
SEIS-PHONE 3
SEIS-PHONE 4
150 FEET
55 FEET
250 FEET
LSP OPERATE POWER
NO STANDBY POWER TO LSP
ACTIVE ON 2
LSP SAFETY SWITCH
LSP STBY
LSP ON
LSP OFF
+29VDC
+12VDC
+15VDC
-12VDC
-15VDC
+29V
-12VDC
+12VDC
-15VDC
+15VDC
+9.5VDC
-9.5VDC
+9.3V
-9.3V
TO AMPLIFIER ELECTRONICS
SCIENCE DATA RANGE:
NORMAL GAIN: 1Hz TO 1SEC TO 10μ/SEC
LOW GAIN: 1.0Hz TO 10SEC TO 100μ/SEC
AT-13-15 THE OUTPUT OF A SENSOR LOCATED ADJACENT TO AT-15
SEE GEOPHONE 1 CIL AND AMP CIRCUIT FOR DETAILS
AP-01-15 ONLY LSP MEASUREMENT MONITORED IN OP (FORMAT MODE)
RESISTOR VALUE SELECTED DURING TEST
TIMING IS NOT SHOWN TO SCALE
NOTES:
SIGNATURES
DATE
NATIONAL AERONAUTICS & SPACE ADMINISTRATION
MANNED SPACECRAFT CENTER HOUSTON, TEXAS
LSP CENTRAL STATION ELECTRONICS
4/SEP 5
APOLLO 17
DWG NO
11.1
SHEET 1 OF 1

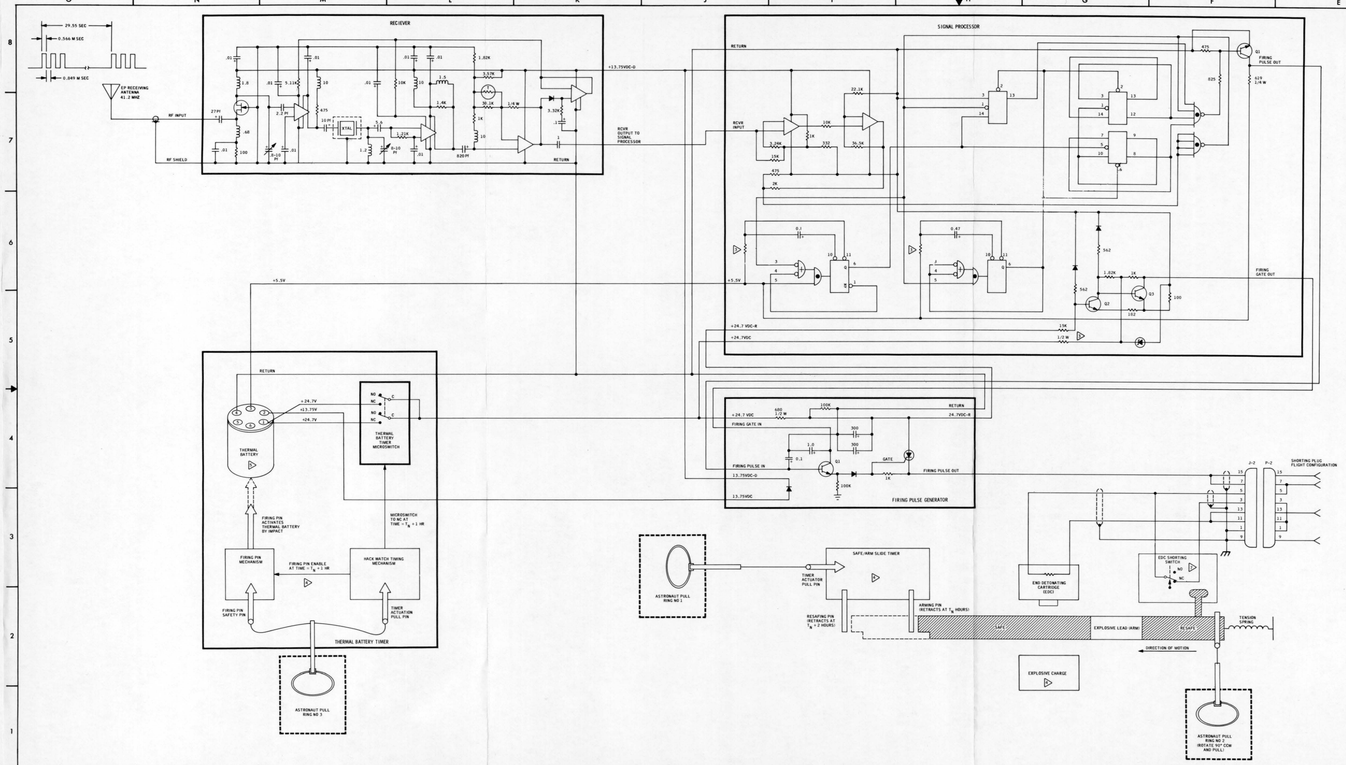

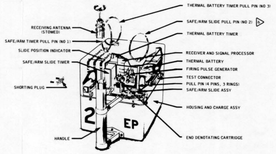

▷ OPEN AT T_B HOURS; CLOSED AT T_B +2 HOURS

▷ ROTATE PULL PIN NO 2 1/4" CCW TO UNLOCK PRIOR TO PULLING FROM EXPLOSIVE PACKAGE

▷ THERMAL BATTERY HAS A MINIMUM LIFE OF 2 MINUTES

▷ LSP EXPLOSIVE PACKAGE

DEPLOYMENT ORDER	PACKAGE NUMBER	CHARGE SIZE LB	TRANSPORT MODULE	DEPLOYMENT EVA	ARM TIME HR T_B +	FIRE TIME HR T_B +	RESAFE TIME HR T_B +
1	4	1	2	1	91	91	92
2	5	3	2	1	91	92	93
3	7	1/2	2	1	92	93	94
4	4	1/8	2	2	90	91	92
5	1	6	1	2	91	92	93
6	8	1/4	1	2	93	94	95
7	2	1/4	1	3	92	93	94
8	3	1/8	1	3	93	94	95

▷ VALUES TO BE DETERMINED AT TEST

▷ TIMING OF LSP BY FIRE PULSES IS NOT TO SCALE

NOTES: ▷ UNLESS OTHERWISE SPECIFIED
CAPACITANCE IS IN MICROFARADS
RESISTANCE IS IN OHMS, POWER IS IN WATT
INDUCTANCE IS IN MICROHENRIES

SIGNATURES	DATE	NATIONAL AERONAUTICS & SPACE ADMINISTRATION
RF		MANNED SPACECRAFT CENTER - - HOUSTON, TEXAS
EE		
ENGR		LSP EXPLOSIVE PACKAGE
ENGR		
ENGR		
ETC		

ALSEP-5	DWG NO 11.2
APOLLO 17	
34 X 22	PAGE 11-11 SHEET 1 OF 1

LTR/FCN	DR	ENGR	DATE	APPROVAL
COMMENTS:				

APOLLO

ALSEPSH

APOLLO LUNAR SURFACE EXPERIMENTS PACKAGE SYSTEMS HANDBOOK

APOLLO 17

ALSEP 5
ARRAY E

AUGUST 8, 1972

FCD
MSC
NASA