ALSS
PAYLOADS

FINAL REPORT

VOLUME I
PROGRAM SUMMARY

JUNE 1965

THE Bendix CORPORATION

APOLLO LOGISTICS SUPPORT SYSTEMS PAYLOADS ... PRELIMINARY DESIGN STUDY

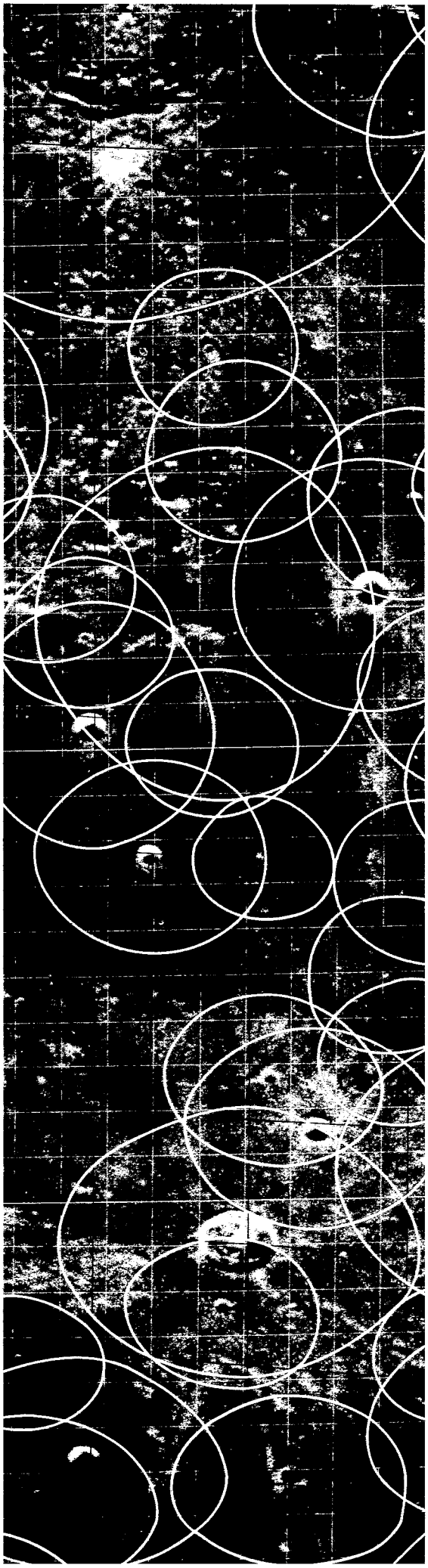

LIST OF VOLUMES

ALSS—TR—013
BSR—1119
BSC—45336

ALSS PAYLOADS

FINAL REPORT

VOLUME I
PROGRAM SUMMARY

PREPARED FOR
NASA/MSFC
UNDER CONTRACT NAS8-11287

APPROVED BY: C. J. Weatherred
C. J. Weatherred
Program Director

JUNE 1965

THE Bendix CORPORATION
BENDIX SYSTEMS DIVISION

CONTENTS

CONTENTS (CONT.)

ILLUSTRATIONS

TABLES

SECTION 1

INTRODUCTION

This volume is a summary of Volumes II to V of the Apollo Logistic Support System (ALSS) Payloads Study Final Report. It is intended as a complete, self-contained description of the basic results obtained by The Bendix Corporation and its major subcontractor, the Lockheed Missile and Space Company, during their performance on NASA Contract No. NAS-11287. In each section, reference is made to the volume of the final report from which further detailed information in the appropriate topic may be obtained. (The volumes are listed opposite the title page.)

The bulk of the contract effort and report deals with the preliminary design of a lunar Mobile Laboratory (MOLAB)—a single ALSS payload vehicle capable of supporting a 2-man, 14-day lunar scientific exploration mission including a 400-km surface traverse. Relative to the MOLAB preliminary design, the contract Statement of Work required a review of existing lunar vehicle conceptual designs; development of new conceptual system designs and subsystems designs, integration of subsystems into a total MOLAB preliminary design, conduct of supporting development, and operations analysis; and preparation of specifications and resources plans. The review of existing conceptual designs was completed early in the program and presented in a separate report (ALSS-TR-003). Likewise, the creation of new conceptual designs for a MOLAB system was completed, a concept selected for preliminary design, and the results presented in the first interim report (ALSS-TR-006). The subsystem preliminary designs, system integration, supporting design, operations analysis, and specifications tasks are all included in the final report and in this summary.

Approximately ten percent of the contract effort was spent on a conceptual design study of a Local Scientific Survey Module (LSSM)—a small, open-cab lunar vehicle for use with a lunar shelter to transport one or two astronauts and 300 to 600 lb of cargo. Two distinct sets of requirements were derived for an LSSM, and three different concepts were developed for each case. This volume contains a summary of the basic subsystem characteristics of each LSSM concept, a discussion of their relative worth, and suggestions for future considerations and detailed design.

Another distinct aspect of the ALSS Payloads Program is the conceptual design of a Mobility Test Article (MTA). This device is a full linear scale representation of a realistic manned vehicle concept. The MTA design and test plans are presented in detail in a separate volume of the final report, and very briefly in this summary.

The last major part of the final report deals with resources planning for development of a MOLAB. This summary volume contains a brief description of the resources planning methods, and summary of the conclusions.

The basic results of the ALSS Payloads Study Program, therefore, are a detailed MOLAB preliminary design, several LSSM conceptual designs, a mobility test article concept design, and a resources plan for MOLAB. The MOLAB design meets all system requirements, and its development is shown to be possible by 1970 at reasonable cost. AN LSSM can be developed to satisfy a wide range of system requirements with resultant vehicle weights of 600 to 1600 lb. Further mission, design, and program evaluation is necessary to select a versatile concept for preliminary design. Detail design, fabrication, and test of a lunar mobility test article can and should be undertaken as soon as possible to provide empirical data on a realistic manned lunar vehicle concept for performance prediction, operational planning, and validation of analytical design methods.

SECTION 2

MOLAB PRELIMINARY DESIGN

2.1 SYSTEM DESIGN

The primary objective of the MOLAB is to extend and augment the Apollo capabilities by increasing data collection capabilities and extending lunar stay-time. The system design is constrained by two aspects of requirements: those imposed by the flight vehicle and those related to the lunar exploration mission objective. The Saturn V/Apollo flight vehicle envelope available for a MOLAB payload is specified by NASA/MSFC drawing no. SK10, 7152 and is described by a core frustrum of 219.1 in. dia at the base (station 200.0) and 182.2 in. dia at the top (station 316.9).

The envelope occupies the space above the LEM Truck and below the Service Module engine nozzle in the launch configuration. The flight profile requires that the stowed MOLAB cg in this envelope be contained within a 2.5 in. radius of the LEM Truck centerline and between 34 and 48 in. above the LEM/T deck (station 198.0). The available payload weight for MOLAB has been estimated as between 6980 lb and 8180 lb from previous LEM/T design studies[1]. For this program, however, 6500 lb was selected as a design objective for MOLAB.

Requirements associated with the surface exploration mission are presented in Table 2-1.

A systematic approach was followed to arrive at a preferred MOLAB concept. Alternate subsystem concepts were developed, and their integration was accomplished through configuration, performance, and complexity trade-offs and comparison. The major MOLAB systems which had the most profound effect on configuration were identified as the cabin system, mobility system, and cryogenic storage. Integrated concept design configurations were developed in detail for variations of each of these systems. Eight of the most promising concepts were evaluated in detail and a four-wheel folding concept with a horizontal cylindrical cabin with two tanks for each cryogen was selected for preliminary design.

To accomplish the scientific exploration mission of MOLAB, approximately 750 lb of scientific equipment, instrumentation, and supporting equipment must be transported with the vehicle. The accommodation of this scientific equipment in terms of weight, volume, power, thermal dissipation, and data transmission was carefully considered. A representative listing of scientific equipment was established in the preliminary design effort to aid in the over-all system design. Near the conclusion of the preliminary design effort, a recommended list of scientific equipment resulted from the Scientific Mission Support Study, NASA Contract NASw-1064. The MOLAB can accommodate this equipment.

[1] Annex E, LEM/T Phase I Study, 10 October 1963.

TABLE 2-1

MISSION REQUIREMENTS

1) Storage Phase Duration	6 months (1 yr. design goal)
2) Manned, Scientific Phase Duration	14 days
3) Emergency Manned Phase Extension	7 days
4) Crew Number and Accommodation	2 95th percentile airmen
5) Life Support Provisioning	42 man-days
6) Manned Phase Internal Cabin Environ.	Shirt-sleeve, 5 psia pure O_2
7) Manned Phase External-to-MOLAB Environment	Portable Life Support System 3.5 psia, pure O_2
8) Manned Mission Period	Lunar midnight to lunar noon*
9) Vehicle Control	Both remote & manual. (Continuous remote driving capability)
10) Lunar Terrain and Topography	As defined by ELMS** Model
11) Ingress-Egress Cycles	No requirements specified (at least 40 assumed)
12) Circular Exploration Capability	80-km (50 mi) radius of LEM/T landing point.
13) Linear Lunar Surface Coverage	No requirement specified (400-km goal)
14) Scientific Equipment Complement	750 lb
15) Maximum Speed	6 km/hr (in soft soil K ϕ = .5 n = .5)
	16 km/hr (hard soil K ϕ = 6 n = 1.25)
16) Maximum Obstacle Negotiable	No requirement specified.
17) Maximum Crevice Negotiable	No requirement specified.
18) Radiation Protection	P = .99 total dose during 14-day period does not exceed: a. 250 rads to skin of whole body. b. 100 rads to blood-forming organs. c. 50 rads to eyes.
19) Meteoroid Protection	P = .99 no penetrations in 194 days with 80% confidence.
20) Remote Monitor	Compatible with Apollo Equipment on Earth, CSM, and LEM.
21) Airlock Size	Accommodate two fully suited 95th percentile astronauts.
22) Unloading	360° azimuth, both remote and manual capability. (One astronaut able to manually unload the MOLAB.)
23) Representative Lunar Traverse	Modified Selenological Traverse***

* In addition, the following periods are considered as design objectives: 1) Lunar noon to lunar midnight, 2) All lunar night, 3) All lunar day.

** Engineering Lunar Model Surface (ELMS), J. F. Kennedy Space Center, 4 Sept. 1964, TR-83-D

*** Annex B, ALSS Statement of Work, Development and Tentative Operations Plan for a Surface Mission for the Lunar Mobile Laboratory, 9 Oct. 1964, R-AERO-SO

The over-all configuration of the MOLAB resulting from the preliminary design is shown in Figure 2-1. Mass and power summaries of all vehicle systems are given in Tables 2-2 and 2-3. The vehicle has a separate chassis for the attachment and installation of the cabin and other major components. Mounted externally to the cylindrical cabin are the hydrogen tanks, dual radiators, communications antennas, external TV cameras, and miscellaneous secondary coolant pumps and equipment. The cabin itself, oxygen tanks, radioisotope thermal generator (RTG), external scientific equipment, battery, vehicle suspension arms, and the prime power assemblies are attached directly to the chassis.

The 452 cu ft cabin contains the astrionics equipment, environmental control system (ECS), controls and displays, and the internal scientific equipment. A two-man, side-by-side driving station in the front of the vehicle is the primary vehicle control station; there is a portable rear driving station in the airlock for emergency situations. An internal scientific work station is provided in the main cabin. An internal bulkhead separates the forward cabin from the 122-cu-ft aft airlock. The rear door and the internal bulkhead door are in line. The doors can be enlarged from their present size, 30 x 60 in., to accept a 38 x 60 x 78 in. lunar flying vehicle (LFV) with no change to the internal

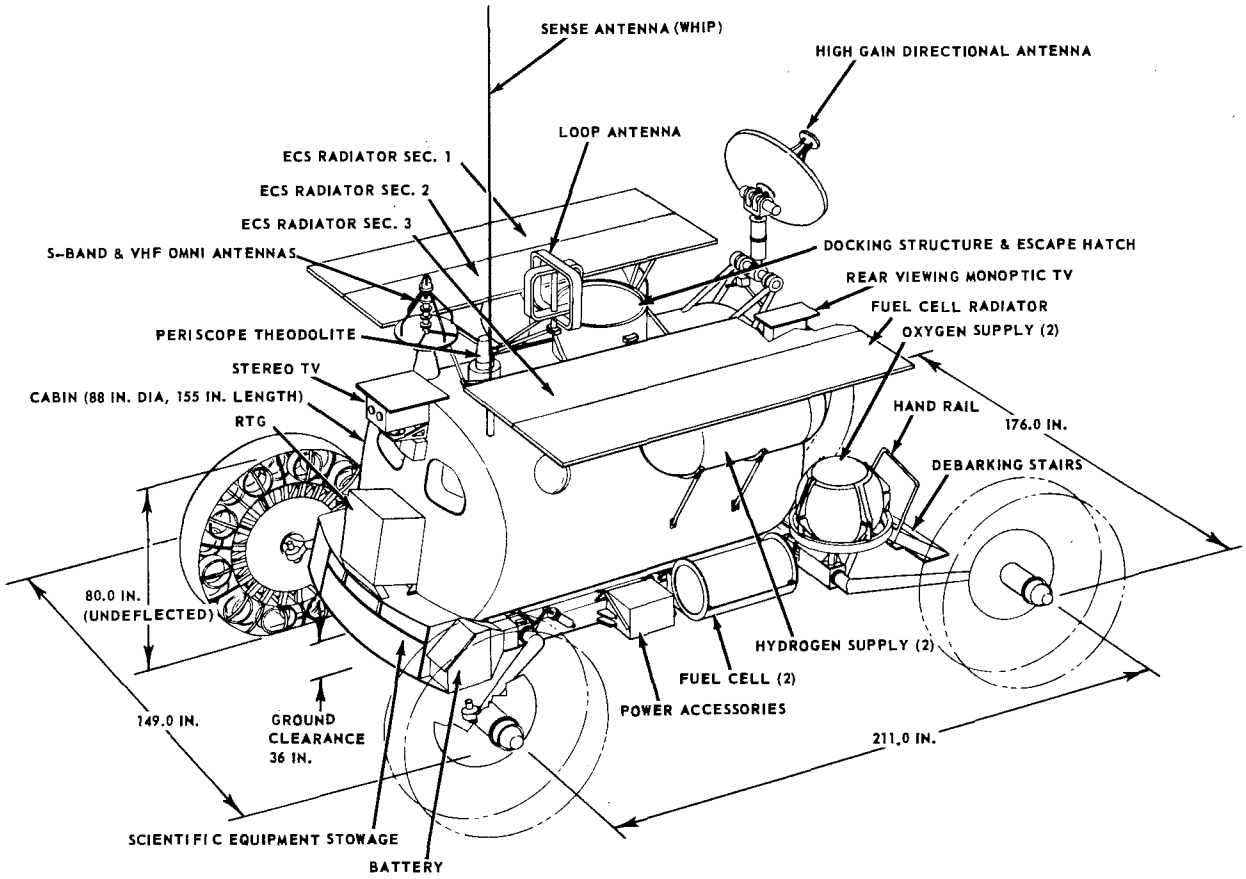

Figure 2-1 Preliminary MOLAB Configuration

TABLE 2-2

MOLAB MASS SUMMARY

		kg		(lbm)	
	DRY MASS				
1.	CABIN SYSTEM		923.1		2035
1.1	Structural Subsys.	352.0		776	
1.2	Airlock	83.9		185	
1.3	Docking Adapter	37.2		82	
1.4	Viewing Ports	26.3		58	
1.5	Controls & Displays	41.3		91	
1.6	Crew System	55.8		123	
1.7	Environ. Control Sub.	81.2		179	
1.8	Aux. Radiation Prot.	34.0		75	
1.9	Int. Thermal Control Sub.	101.2		223	
1.10	Internal Cabling	73.0		161	
1.11	Storage Th. Cont. Sub.	28.1		62	
1.12	Astrionic Cabinets	9.1		20	
2.	MOBILITY SYSTEM		832.8		1836
2.1	Chassis	86.2		190	
2.2	Cryogenic Storage	337.5		744	
2.3	TDM Assembly	111.6		246	
2.4	Traction Assy	188.7		416	
2.5	Suspension Assy	69.4		155	
2.6	SDM Assembly	14.1		31	
2.7	Exterior Mobility Cables	10.9		24	
2.8	Mobility Controller	12.7		28	
2.9	Motor Rev. Relays	1.8		4	
3.	POWER SYSTEM		220.9		487
3.1	Primary Power Sub.	145.1		320	
3.2	Secondary Power Sub.	35.4		78	
3.3	Auxiliary Power Sub.	23.6		52	
3.4	Power Distribution	16.8		37	
4.	ASTRIONICS SYSTEM		197.8		436
4.1	Navigation & Guidance	34.0		75	
4.2	Communication Sub.	127.9		282	
4.3	Electronics (TV) Sub.	28.1		62	
4.4	Command & Control	7.8		17	
5.	SCIENTIFIC EQUIPMENT		317.5		700**
5.1	ESS Equipment	22.7		50	
5.2	Instru-Vehicle Fixed	288.0		635	
5.3	Instruments-Portable	6.8		15	
5.4	Support Structure	(11.4)*		(25)	
6.	UNLOADING & TIEDOWN		159.7		352
6.1	Support & Tiedown	24.0		53	
6.2	Variable Azimuth Device	27.7		61	
6.3	Unloading Device	96.6		213	
6.4	Ramp Snubber	0.5		1	
6.5	Electronic Equipt.	4.5		10	
6.6	Manual Unload Device	6.4		14	
	DRY MOLAB MASS TOTAL		2651.7		5846
	EXPENDABLE MASS				
A.	Life Support		176.4		389
	Environmental Control	166.0		366	
	LO_2	(100.3)		(221)	
	Li OH	(61.2)		(135)	
	Misc.	(4.5)		(10)	
	Crew Systems	10.4		23	
	Water	(6.8)		(15)	
	Waste Handling	(3.6)		(8)	
B.	Power System		257.2		567
	Scientific Equipment	22.7		50	
	LO_2	(20.0)		(44)	
	LH_2	(2.7)		(6)	
	All Other Systems	234.5		517	
	LO_2	(206.8)		(456)	
	LH_2	(25.9)		(57)	
	H_2O	(1.8)		(4)	
	TOTAL EXPENDABLES		433.6		956
	PAYLOAD MASS				
	Total MOLAB Dry Mass		2651.7		5846
	Expendables		433.6		956
	TOTAL PAYLOAD MASS		3085.3		6802

*This weight is an estimate for structure required for scientific equipment and is actually accounted for in the chassis weight.

**Total Scientific Payload Allotment = 700 LBM for Equipment + 50 LBM for Expendables = 750 LBM.

TABLE 2-3

MOLAB POWER AND ENERGY SUMMARY

Item	14-Day Mission				7-Day Extended Stay			
	Power (Watts)	Hours Used	Energy (Kw - Hr)		Power (Watts)	Hours Used	Energy (Kw - Hr)	
A. Cabin								
Suit Fans	131	336	44.1		131	168	22.0	
Cabin Fan #1	30	336	10.0		30	168	5.0	
Cabin Fan #2	30	120	3.6		30	70	2.1	
Lock Fan	31	120	3.7		31	70	2.1	
ECS Junction Box	25	336	8.4		25	168	4.2	
PLSS Lox Accum. (3/day, 10 min.)	150	7	1.1		–	–	–	
Airlock Pump (3/day, 5 min.)	640	3.5	2.1		640	1	0.6	
Coolant Pumps	40	336	13.4		40	168	6.7	
Gas Monitoring	6	336	2.0		6	168	1.0	
Controls & Displays	59*	336	19.8		25	168	4.2	
Internal Lighting	86*	336	28.8	137.0	75	168	12.6	60.5
B. Astrionics								
Communications	267*	336	89.6		100	100	10.0	
Navigation	141	63	9.0		-	-	-	
TV	21*	336	7.1		-	-	-	
External Lighting	100	60	6.0	111.7	-	-	-	10.0
C. Scientific Equipment								
Drill	3000	18.0	54.0		-	-	-	
Detectors	35	336	11.6		-	-	-	
Instrumentation	100	94	9.4	75.0	-	-	-	
D. Power System								
Cryogenic Heating & Control	50	336	16.8	16.8	50	168	8.4	8.4
E. Mobility	2250*	63	142.0	142.0	-	-	-	
TOTAL (14 + 7 Days)				482.5				78.9 561.4

*Average

arrangement. Sleeping provisions are included in both the forward cabin and airlock for one astronaut each. The cabin is pressurized for a 5-psia shirt-sleeve environment of pure O_2.

A portable polyethylene storm cellar is used for solar flare radiation protection. This concept makes maximum use of internally mounted cabin equipment as a shield.

The mobility systems feature four flexible metal wheels with the drive motors individually housed in the hub of each wheel. The wheels are 80 in. in diameter, 12-in. wide, and have a 5.0-in. static deflection. The traction drive mechanism drives a nutator transmission and wheel through a first-stage planetary transmission. The planetary transmission provides a 5:1 speed reduction. Single-ended Ackermann steering is accomplished by individual steering drive mechanisms on each front wheel. The suspension system unfolds during debarking to give wheel base, front span, and rear span dimensions of 211 in., 149 in., and 176 in., respectively.

These mobility design features enable the MOLAB to negotiate a 110-cm step obstacle head on, to cross a 173-cm crevice, and to travel at 16 km/hr maximum speed on a hard surface. Other MOLAB performance characteristics are shown in Table 2-4.

TABLE 2-4

MOLAB PERFORMANCE CHARACTERISTICS

Range Capability	400 km+
Scientific Equipment	341 k_g (750 lb_m)
Energy	700 kw hr
Maximum Continuous Power	4.5 kw
Maximum Stoage Power	67 w
Cabin Volume	452 ft^3
Ingress-Egress Cycles	40+
MOLAB-Earth Downlink	Voice, TV, PCM & Analog Data, via S-band
Earth-MOLAB Uplink	Command, Voice via S-band
Inter-astronaut Communication	T/M, Voice via VHF-AM
Remote Control Speed	5 km/hr
Maximum Speed (Hard Soil)	16 km/hr
Obstacle Negotiability	110 cm
Crevice Negotiability	173 cm
Maximum Obstacle @ 16 km/hr	12.5 cm
Minimum Turn Radius	13 m

2.2 MOBILITY SYSTEMS

This section presents the results of the MOLAB mobility systems preliminary design study including the analysis conducted to support the selection and integration of subsystem conceptual designs. Details are given in Vol II, Book 2.

2.2.1 Summary of Key Design Features - Lunar surface locomotion is provided by four individually driven and independently suspended metal elastic wheels. The four-wheel mobility concept was chosen over all others considered because it offers the best balance between performance, life support, cabin size, LEM/Truck envelope accommodation, simplicity, and system weight. Being conventional in design, and having inherently simple operational features, the four-wheel mobility concept also offers a high degree of confidence in the ability to effect design improvements downstream in the development program as better information about the lunar surface properties becomes available.

The four metal-elastic wheels are stowed inside the LEM/T shroud during lunar transit in a folded position and deployed automatically or manually to their proper operational wheel base and span during unloading. The deployable gear approach was chosen over the more conventional and operationally simpler fixed wheel because it permits the use of 30% larger wheels, wider steering clearances, double the length of the wheel base, and provides a means for optimizing the longitudinal location of the vehicle center of gravity relative to the wheel axles—all of which contribute to higher performance. In their deployed running position, the front wheels extend well ahead of the cabin and the rear wheels well aft. Thus, the inboard wheel-hub areas are exposed to large space-view factors which permit the use of small passive thermal-control radiators of conventional design to cool the hub-mounted traction drive and steering assemblies.

The wheel design features a 52-in. light weight aluminum design rim assembly to which is attached an 80-in. dia metal elastic tire. The rigid rim assembly consists of a hub and a series of 20 spokes constructed of radial struts and axial webs to minimize weight and reduce thermal stresses. The tire, or flexible portion of the wheel, includes a series of 40 circular ring elastic elements, of 14 in. dia, arranged symmetrically around the rim with their axes parallel to the hub axis. The elastic rings are enclosed within an outer elastic band to which are attached the tread material and a series of fabric sidewall straps designed to enhance the wheel torsional rigidity. A flexible wheel design concept is chosen over the simpler rigid wheel approach because it results in a lower system weight due to lower energy requirement to traverse the wide range of lunar surface conditions specified by Marshall Space Flight Center in their Engineering Lunar Model Surface. Weight optimization studies show that for this size wheel the flexibility should provide average ground contact pressures between 0.5 and 0.1 psia. The low pressure designs result in minimum locomotion energy consumption; however, the high wheel flexibility requires a significant structural weight penalty to overcome the dynamic loads. The high pressure designs provide a much better balance between loading and footprint area. To take full advantage of the weight optimization, the front wheels are made slightly stiffer than the rear wheels. The discrete-ring, electric-element

design for the flexible tire provides the necessary wheel compliance under load without involving relative motion between its metal parts. This feature eliminates the high risk of cold welding which may result in the stiffening of the wheel.

Each wheel is independently suspended from the chassis by means of a crank arm structure coupled to a torsion bar and fluid damper. Independent suspension is ideally suited to this type of deployable gear design because it is simple and can readily be adjusted for asymmetric load distributions. Torsion bar suspension was chosen because it offers a means of high energy storage within a small volume and at low weight. The suspension system spring constant is sized to provide an over-all vehicle natural frequency no lower than 0.5 cps for crew comfort and large dynamic deflections for shock absorption during high speed travel over rough terrain. A compromise design for the MOLAB size and configuration is to provide a suspension system spring constant comparable to that of the wheel resulting in a combined wheel and suspension system static deflection of 10 in. and a combined linear dynamic deflection of 10 additional inches. To protect the chassis structure against abnormal dynamic loads, a snubber is provided capable of two additional inches of deflection at a rate four times that of the suspension system. Fluid damping is chosen over all others considered, in spite of its inherent requirement for thermal control, because it is actually less complex and much lighter than a mechanically decoupled pre-loaded coulomb damper or hysteresis dampers with high-ratio gear reduction.

Each wheel is individually powered by a DC electromechanical drive mechanism located inside the hub. All four wheels are powered to take full advantage of the soil thrust limitations and to provide degraded mode performance in case a wheel drive unit fails. Hub mounting permits a clean design interface for steering and also permits design integration of the wheel hub and drive structure to save weight. DC drive motors were chosen because of the efficient use of series type torque-speed relationship with simple controls and simplification of the power conditioning from the DC primary power source. To prolong DC motor brush life, the electrical components of the traction drive mechanisms are hermetically sealed by means of a nutator transmission which converts the undulating motion of a metallic diaphragm seal into angular rotation of the wheel-drive output shaft. Within the hermetic seal, a controllable gaseous atmosphere can be maintained to prolong brush life and also to act as a convection medium to transfer internal heat out to the drive mechanism assembly for thermal control.

The traction drive mechanism features a two-speed transmission, a dual brake, and a free-wheeling decoupler with automatic and manual decoupling capability. A two-speed transmission is chosen to reduce by 50% the maximum current through the motor armature under extreme peak power operation. Current reduction permits the use of conventional switching components, reduces power

cable size, prolongs brush life, and reduces peak interval heat loads. The two-speed capability is provided by a two-position planetary transmission with a solenoid-actuated spring-loaded clutch which fails-safe into high gear.

A dual brake system is chosen to reduce the internal heat dissipation during high speed braking and to provide a safe parking brake. The dynamic braking is accomplished by reversing the current through the armature of the drive motor and operating the motor as a generator using the throttle voltage controls. Energy is dissipated in a remote load resistor. Low speed and parking brake torques are provided by a set of mechanical disc friction brakes which are compressed by an irreversible screw-type actuator powered by a small DC motor. The two-speed transmission and mechanical brake components are contained inside the hermetic seal. Manual free wheeling is achieved by removing the nutator transmission output gear plate which is normally bolted or keyed to the wheel hub. Automatic decoupling is accomplished by means of an explosive shaped charge which severs the nutator transmission output gear plate. The traction drive mechanism may be manually recoupled by replacing the severed drive plate with a new one.

Steering is accomplished by means of two electromechanical actuators on the front wheels. Front-wheel steering was chosen over four-wheel for simplicity and weight savings. The deployable gear concept is ideally suited for four-wheel steering, and this feature can easily be incorporated should a requirement for extreme maneuverability exist. In addition to conventional Ackermann steering using the two front-wheel steering actuators, MOLAB can be steered in a scuffing mode by applying differential voltage to the driving units for the four wheels. The scuffing mode is recommended for emergencies only due to excessive energy loss and wear on the wheel tread. The steering actuators incorporate a hermetically sealed DC drive motor using a nutator transmission and a bar linkage. King-pin inclination, offset, and caster are set to provide stable steering in the forward direction when one steering unit is disabled.

The chassis frame structure is of conventional design using rectangular section beams for structural efficiency and ease of equipment mounting. The principal load carrying fittings are made of titanium to conserve weight. Most of the MOLAB external equipment is mounted directly to the chassis in the front, sides, and rear to keep the center of gravity low for stability and to minimize secondary structural weight. The cabin is attached to the chassis at four points located directly over the LEM/Truck tiedown fittings to minimize stresses on primary structure due to landing loads. The cabin fittings are designed to minimize thermal conduction between the cabin internal environment and the chassis. Some external components, such as the cryogenic hydrogen tanks, spare radiator, and antennas are attached directly to the cabin to reduce the weight of secondary support structure.

The cryogenic storage and supply features two cylindrical hydrogen tanks vented for supercritical standby and two spherical oxgen tanks with non-vented standby initially filled to provide a subcritical storage. Dual tankage was chosen for each cryogen at a weight penalty of 280 lb in order to provide redundancy for emergency returns to base and to reduce the tank external diameter for better design integration and vehicle center of gravity control. The hydrogen tanks are made cylindrical, at a weight penalty of 160 lb, to further facilitate system design integration. Supercritical, vented hydrogen standby storage is chosen because, for the useful quantities required and the minimum system pressure allowed, this type of storage resulted in minimum system weight. Subcritical non-vented oxygen standby storage is chosen for minimum oxygen system weight. The cryogenic tanks are of double-wall construction with superinsulation and an evacuated environment in between. Superinsulation is chosen at this time because of its advanced state of development; however, pending verification of the installation techniques of superinsulation to the size and shape of vessels for MOLAB, an alternate tank design using discrete radiation shields can be considered.

2.2.2 Summary of Key Operational Features - The selected mobility concept with deployable wheels provides an over-all vehicle configuration with excellent static stability characteristics. Roll stability is provided to $\pm 41^{\circ}$. The pitch stability limit in the forward direction is 47° and in the rearward direction 60°. Even under the most adverse soil and terrain conditions (32° friction angle) the vehicle will slide before it overturns.

During a high-speed steering maneuver the vehicle will also achieve sliding instability before it overturns. Wheel steering rates are set for a nominal of 6° per second under the extreme wheel-loading condition. This value of wheel turn rate was established to be a reasonable compromise between vehicle turning performance and steering actuator size. Larger wheel turn rates do not contribute significantly to steering performance and actuator torque requirements increase rapidly for wheel turn rates higher than 6°/sec. Sliding instability will occur during a turn on sideslopes steeper than 20° covered with soft soil. On soft soil sideslopes lower than 20° the vehicle is capable of recovering from an initial tendency to slide laterally as the turn is initiated. On hard soil sideslopes there is no sliding instability up to slope inclinations of 30° and speeds up to 16 km/hr, although initially the vehicle will start to slide laterally.

The MOLAB vehicle ride is characterized by natural frequencies in pitch, roll, and vertical motions of the order of 1/2 cps. The soft suspension system in combination with the large flexible wheels permit high-speed operation over bumpy surfaces without exceeding limit loads on the wheel flexible elements or bottoming of the suspension. Random sharp step obstacles up to 12.5 cm in height can be crossed at maximum speed of 16 km/hr without exceeding wheel limit limit loads. At lower speeds, larger random obstacle crossings can be permitted.

Vehicle forward and reverse speed is controlled by a throttle position which commands the same constant voltage to all four traction drive motors, through a pulse-width modulator. To operate in reverse, the motor armature is first switched to pass current in the opposite direction. If the armature reversal relay is thrown while the vehicle is in forward motion, a remote resistor is switched in series with the armature and the motor will act as a generator to effect dynamic braking. Dynamic braking torque level is controlled by the same throttle operating through the pulse modulator to control the voltage into the remote load resistor. Dynamic braking is effective from speeds of 16 km/hr down to about 3 km/hr. At lower speeds, braking is achieved through a disc-type friction brake contained within the traction drive mechanism housing. At a fixed input voltage to the traction drive motors, each wheel seeks an operating rpm which is self stabilized for the particular soil being traversed. The combination of DC series motor torque speed characteristics and soil shear-slip characteristics result in stable operation. If the soil is homogeneous, the front pair of wheels will have equal forward thrust if the same voltage is applied to each drive motor. The rear pair of wheels will also have equal forward thrust, but not necessarily the same value as the front pair. Thus, constant voltage input to all four drive units results in yaw stability if the soil is homogenous. For non-homogeneous soil, such as one front wheel on soft soil and the other on hard soil, a yawing moment will develop which is divergent, and steering or other corrections must be used. For simplicity, the MOLAB locomotion control is achieved by applying a constant voltage to all four drives with steering override to overcome the unknown soil effects. Speed is increased or decreased on command by increasing or decreasing respectively the input voltage to all four drive motors simultaneously.

Steering is accomplished by a wheel-angular-position feedback servo. To achieve an Ackermann wheel-position relationship wherein the outboard wheel is turned slightly less than the inboard wheel, an electrical bias is used on the appropriate wheel-position feedback which is a function of the nominal wheel-angle command. Speed differential between outboard and inboard wheels is also provided by reducing the voltage to the appropriate traction drive motors by a preselected ratio which is a function of the wheel angle command.

The traction drive mechanism has a two-speed transmission which permits a downshift from high gear by a factor of five. Low-gear operation limits vehicle speeds to about 3 km/hr. High gear operation permits speeds of up to 16 km/hr on hard level terrain. On slopes of 20°, the maximum speed achievable in high gear is about 3 km/hr. For operation up or down slopes of 20° or steeper, low gear should be used. In low gear, the dynamic brake is effective down to 1/2 km/hr. The two-speed planetary transmission has a fail-safe feature which leaves the ratio in high gear if no power can be applied to the magnetic clutch. This fail-safe configuration is preferred because if one drive unit is permanently in the high gear position, the other three drive units can be

operated in either high or low gears thus permitting high speed operation. If one transmission were to fail in low gear, then in order to prevent complete failure of its drive motor, the vehicle speed would have to be restricted to about 3 km/hr.

Obstacle climbing, crevice crossing, and steep hill operation is accomplished at low speeds in low gear. With the 80-in. diameter flexible wheels, step obstacle climbing capability as high as 110 cm has been demonstrated with a 1/10 scale model under full power. The maximum vehicle pitch altitude during such a climb is about 20° which leaves about 15° of downward vision available to the astronaut. Wheel flexibility degrades crevice crossing from what is achieved with rigid wheels of comparable diameter. Scale model tests show a crevice crossing capability of 173 cm. The obstacle performance under degraded mode operation, assuming one and two drive units disabled has also been measured experimentally. With one drive units disabled step obstacle climbing capability degrades to 50 cm and crevice crossing to 100 cm.

Degraded mode steering performance with one and two steering units disabled also has been measured with the 1/10 scale model. The king pin caster angle has been established to provide maximum directional control in the forward direction with both steering drives inoperative. If one steering actuator fails, the wheel is free castered by decoupling the actuator completely from the king pin. Steering in the forward direction is then achieved through wheel-angle control of one wheel only. The free castered wheel follows a minimum drag path in the forward direction, resulting in no degradation during a low-speed turn. Steering effectiveness is lost, however, in the reverse direction since the free castered wheel is unstable and will follow a maximum drag path. Back-up directional control is still available by dragging the disabled wheel or following a circular path at low speed until completely turned around. If both steering actuators failed, the two front wheels are free castered. In the forward direction, steering is achieved by applying differential voltage to the front wheels. In the rearward direction, the vehicle can be backed up in a circle either hard right or hard left; however, the backing up direction can be selected by first positioning the free castered wheels against the desired stop with a forward maneuver.

The average specific energy consumption of the mobility system for a typical traverse over the specified lunar terrain is estimated to be 0.34 kw-hr/km. This estimate is based on the assumptions that: five complete stops and starts to maximum speed will be made per mile; one hundred 90° turns will be executed per mile; and forty obstacles having an average height of 48 cm will be crossed per mile. The mobility controller efficiency is 85%. Negative slopes of 5° and steeper require negligible power for locomotion. On level terrain, the specific energy consumption is 0.2 kw-hr/km, while on 15° up slopes it increases to 0.94 kw-hr/km. Under these assumptions, MOLAB will require 136 kw-hr of locomotion energy to traverse 400 km. This is about 20% of the total energy capacity of MOLAB.

2.3 CRYOGENIC STORAGE AND SUPPLY

The cryogenic fluids required for the fuel cells primary power systems and the life support function of the cabin systems for MOLAB are stored in double-walled evacuated dewar type vessels in which the evacuated space between walls is laminated with superinsulation. These cryogenic storage vessels retain the required quantities of cryogen after 180 days of lunar surface standby. The cryogenic storage and supply system stores and distributes all on-board hydrogen and oxygen. The cryogenic hydrogen system contains 63 lb of usable hydrogen at the end of 180 day standby, 9 lb of which are provided for energy contingencies. The cryogenic oxygen system contains 721 lb of oxygen, 430 lb of which are oxidized for the fuel cells, 221 lb are usable for life support, and 70 lb for contingencies.

Two tanks are provided for each cryogen to ensure a high reliability for emergency return and also to facilitate vehicle design integration and cg control. Each tank is a self-sufficient cryogenic storage system capable of independent operation. The cryogenic storage vessels are equipped with quantity, temperature, and pressure sensors in addition to the required components for monitoring the status and performing the operational requirements imposed in the system.

2.3.1 Hydrogen System - Hydrogen is stored in two vented cylindrical vessels, designed and initially filled to obtain a supercritical pressure of 661 psia prior to venting and prior to completion of 180-day standby. The operating pressure of the supercritical system during fluid withdrawal will range from 661 to 100 psia. A functional schematic diagram of the hydrogen storage system is shown in Figure 2-2. This figure identified the functional components and shows their relative locations in the hydrogen storage system.

The design details for the hydrogen system are summarized in Table 2-5. Features of the system include: supercritical storage with vented standby; two cylindrical storage vessels; 31.5 lb of usable hydrogen per tank; 180-days standby; maximum storage pressure is 661 psia; a residual density of 0.35 lb/ft^3; Linde SI-44 superinsulation having an efficiency of 50%; cryoformed stainless steel for the inner vessel; aluminum 6061 T-6 for the outer vessel; and aspect ratio of 3.0 for the cylinder based on the internal diameter of the inner vessel.

2.3.2 Oxygen System - The optimum system weight to store oxygen for 180 days is obtained in a non-vented system operating below the critical pressure in the subcritical state. The oxygen is stored in two identical non-vented spherical vessels at subcritical pressure of 294 psia. This two-phase system will operate between the storage pressure of 100 psia and deliver liquid oxygen and/or gas mixture to the fuel cells and life support system.

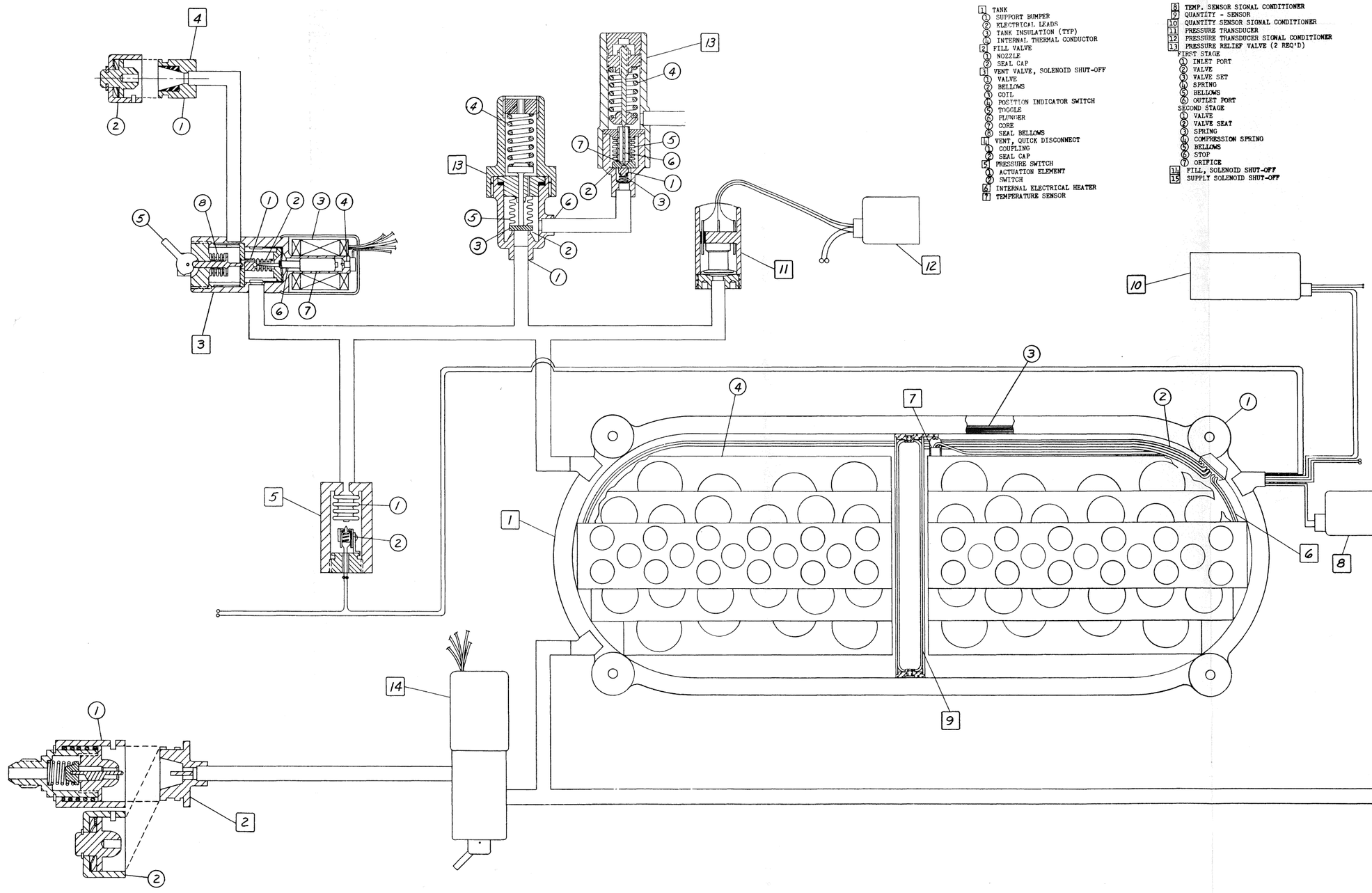

Figure 2-2 Hydrogen Storage System Schematic

TABLE 2-5

HYDROGEN SYSTEM DESIGN FEATURES

Hydrogen Storage Vessel Data	
1. External dimensions, (in.)	30.8
2. Internal diameter, (in.)	22.97
3. Inner vessel wall thickness, (in.)	
A. Spherical section	0.0222
B. Cylindrical section	0.0444
4. Outer vessel wall thickness, (in.)	
A. Spherical section	0.0400
B. Cylindrical section	0.1070
5. Insulation thickness, (in.)	3.605
6. Initial percentage fill, (%)	95.0
7. Total fluid weight per tank, (lb)	61.64
8. Dry system weight, per tank, (lb)	244.67
9. Total system weight per tank, (lb)	306.31

Hydrogen System Weights		
1. Dry weights per tank, (lb) (kgs)		
A. Inner vessel	57.92	(26.3)
B. Insulation	65.37	(29.6)
C. Outer vessel	62.90	(28.5)
D. Valves	8.63	(3.9)
E. Supports and Miscellaneous	49.85	(22.8)
Total Dry Weight	244.67	(111.1)
2. Fluid weight per tank, (lb) (kgs)		
A. Usable at end of 180-days standby	31.50	(14.3)
B. Vented fluid	25.00	(11.3)
C. Residual fluid (unusable)	5.14	(2.3)
Total Fluid Weight	61.64	(27.9)
3. Total weight per tank, (lb) (kgs)	306.31	(139.0)
4. Total system weight (tow tanks), (lb) (kgs)	612.62	(278.0)

A functional schematic diagram of the oxygen storage system is shown in Figure 2-3. This figure identifies the functional components and shows their relative locations in the oxygen storage system. Design details for the oxygen system are presented in Table 2-6. The features of the system include: subcritical storage non-vented standby; two spherical storage vessels; 360.5 lb of usable oxygen per tank; 180-days standby; maximum storage pressure of 294 psia; a residual density of 0.9 lb/ft^3; Linde SI-44 superinsulation having an efficiency of 50%; cryoformed stainless steel for the inner vessel with a minimum thickness of 0.015 in.; aluminum 6061 T-6 for the outer vessel; and 100% fill at the maximum storage pressure of 294 psia.

2.4 CABIN SYSTEMS

The preliminary design of the cabin systems for MOLAB has been accomplished by the Lockheed Missiles and Space Company under subcontract to Bendix Systems Division. The primary cabin design is covered in this section, including configuration, internal arrangement, structural design and analysis, material selection, and meteoroid protection. Also, included are the results of human factors studies on cabin habitability, mockup verification, and controls and displays. Further, provisions for solar flare radiation protection, crew systems, environmental control systems, and thermal control are discussed. See Books 4 and 5, Vol. II, for details.

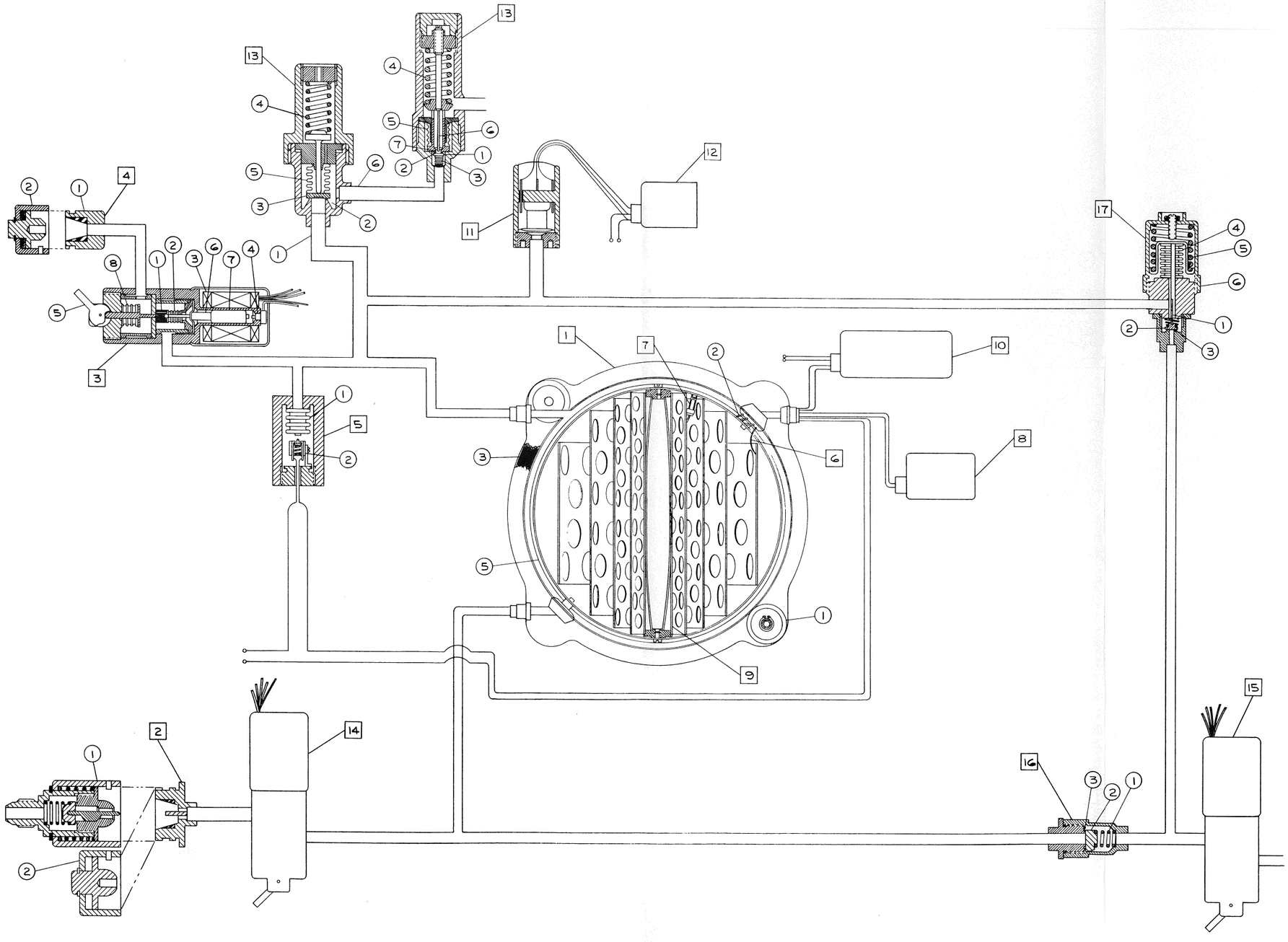

LEGEND

1 TANK
(1) SUPPORT BUMPER
(2) ELECTRICAL LEADS
(3) TANK INSULATION (TYP)
(4) INTERNAL THERMAL CONDUCTOR
(5) MOUNT RING
2 FILL VALVE
(1) NOZZLE
(2) SEAL CAP
3 VENT VALVE, SOLENOID SHUT-OFF
(1) VALVE
(2) BELLOWS
(3) COIL
(4) POSITION INDICATOR SWITCH
(5) TOGGLE
(6) PLUNGER
(7) CORE
(8) SEAL BELLOWS
4 VENT, QUICK DISCONNECT
(1) COUPLING
(2) SEAL CAP
5 PRESSURE SWITCH
(1) ACTUATION ELEMENT
(2) SWITCH
6 INTERNAL ELECTRICAL HEATER
7 TEMPERATURE SENSOR
8 TEMPERATURE SENSOR SIGNAL CONDITIONER
9 QUANTITY SENSOR
10 QUANTITY SENSOR SIGNAL CONDITIONER
11 PRESSURE TRANSDUCER
12 PRESSURE TRANSDUCER SIGNAL CONDITIONER
13 PRESSURE RELIEF VALVE (2 REQ'D)
FIRST STAGE
(1) INLET PORT
(2) VALVE
(3) VALVE SET
(4) SPRING
(5) BELLOWS
(6) OUTLET PORT
SECOND STAGE
(1) VALVE
(2) VALVE SEAT
(3) SPRING
(4) COMPRESSION SPRING
(5) BELLOWS
(6) STOP
(7) ORIFICE
14 FILL SOLENOID SHUT-OFF
15 SUPPLY, SOLENOID SHUT-OFF
16 CHECK VALVE
(1) COMPRESSION SPRING
(2) VALVE
(3) VALVE SEAT
17 PRESSURE OPENING VALVE
(1) PLUNGER
(2) VALVE
(3) VALVE SEAT
(4) BELLOWS
(5) COMPRESSION SPRING
(6) ADJUSTMENT

Figure 2-3 Oxygen Storage System Schematic

TABLE 2-6

SYSTEM DESIGN FEATURES

Oxygen Storage Vessel Data	
1. External diameter, (in.)	30.76
2. Internal diameter, (in.)	27.97
3. Inner vessel wall thickness, (in.)	0.0150
4. Outer vessel wall thickness, (in.)	0.0406
5. Insulation thickness, (in.)	1.339
6. Initial percentage fill, (%)	77.7
7. Total fluid weight per tank, (lb)	366.47
8. Dry system weight per tank, (lb)	91.20
9. Total system weight per tank, (lb)	457.67

Oxygen System Weights		
1. Dry weight per tank, (lb) (kg)		
A. Inner vessel	11.62	(5.3)
B. Insulation	10.85	(4.9)
C. Outer vessel	12.98	(5.9)
D. Valves	8.63	(3.9)
E. Supports and Miscellaneous	47.12	(21.4)
Total Dry Weight	91.20	(41.4)
2. Fluid weight per tank, (lb) (kg)		
A. Usable at end of 180-days standby	360.50	(163.5)
B. Vented fluid	0.00	(0)
C. Residual fluid (unusable)	5.97	(2.7)
Total Fluid Weight	366.47	(166.2)
3. Total weight per tank, (lb) (kg)	457.67	(207.9)
4. Total system weight (two tanks), (lb) (kg)	915.34	(415.8)

The conceptual design analyses resulted in the following design:

1. Cabin Configuration - Horizontal cylinder, aft airlock, in-line rear and interior bulkhead doors; total volume 452 ft^3; airlock volume 122 ft^3.

2. Cabin Structure - Single-wall semimonocoque primary structure, fiberglass mat for thermal and meteoroid protection with external nonstructural meteoroid bumper.

3. Solar Flare Protection - Polyethylene sit-in storm cellar assembled as needed.

4. Control and Displays - Single-lever speed and direction control; primary direct reading panels at driving station with annunciators.

5. Crew Accommodations - Two-man forward driver-navigation station; emergency rear driving station; side scientific work station; sleeping provisions in both forward cabin and airlock; two rear airlock accommodations; clear central aisle (equipment along wall).

6. Life Support - Freeze-dried food, stored sterilized waste; storage phase, RTG heat pumped through mission ECS; mission phase, space radiator plus water boiler backup; CO_2 removal by LiOH; contaminant removal by charcoal.

The mass breakdown for these selected systems is shown in Table 2-7. The exterior envelope and interior arrangement are shown in Figure 2-4.

D	REDRAWN & REVISED
E	ENGINEERING RELEASE

1 PCM T/M EQUIP
2 UNIFIED S-BAND EQUIP
3 PREMODULATION PROCESSOR
4 SIGNAL CONDITIONERS
5 UPLINK DATA DECODER
6 CENTRAL TIMING EQUIP
7 VHF-AM TRANSCEIVER
8 MISSION RECORDER
9 DIPLEXER & POWER AMP
10 DATA PROCESSOR & BUS
11 THEODOLITE
12 SEXTANT
13 DIRECTIONAL GYRO
14 VERTICAL GYRO
15 COMPUTER
16 POWER INVERTER
17 STATIC INCLINOMETER
18 GLOVE BOX
19 SCIENTIFIC DATA RECORDER
20 GRAVITYMETER
21 CABIN HEAT EXCHANGER
22 AIRLOCK HEAT EXCHANGER
23 DEBRIS TRAP
24 CABIN LITHIUM HYDROXIDE CANISTER
25 (PLSS) CABIN LiOH CANISTER
26 SUIT FAN(S)
27 SUIT LOOP WATER BOILER
28 HEAT XCHR & WATER SEPARATOR
29 SUIT LOOP REHEATER
30 WATER CHILLER
31 DRINKING WATER TANK
32 COOLING WATER TANK
33 AIRLOCK PUMP
34 (PLSS) LiOH STORAGE
35 FC-75 PUMP
36 FC-75 ACCUMULATOR
37 FOOD STORAGE
38 PERSONAL HYGIENE
39 WASTE MANAGEMENT
40 ACCESSORIES
41 EMERGENCY EQUIP
42 THERMAL INSULATION GARMENT(S)
43 THERMAL BOOTS
44 THERMAL GLOVES
45 PRESSURE GARMENT ASSEM
46 CONST WEAR GARMT WATER COOLED
47 CONST WEAR GARMT GAS COOLED
48 EXTRA VEHICULAR BOOTS
49 SUIT REPAIR KITS
50 HELMETS
51 PORTABLE LIFE SPT SYS. (BACKPACKS)
52 JUNCTION BOX
53 SURFACE ELECTRICAL MEASURING EQUIP.
54 CAMERA (SCIENT. EQUIP)
55 WATER TANK - RADIATION PROTECTION
56 WATER TANK - RADIATION PROTECTION

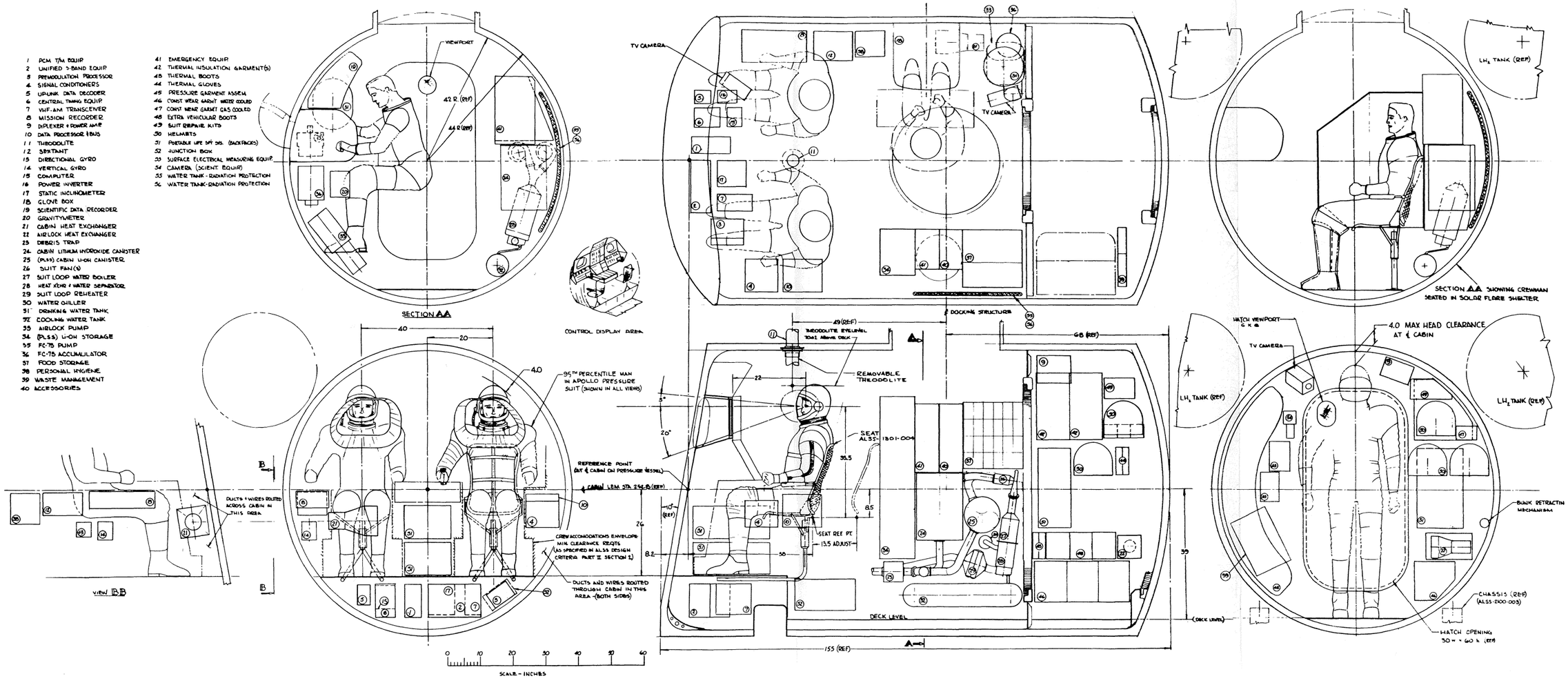

Figure 2-4

DATE 8-25-65	LOCKHEED MISSILES & SPACE COMPANY, A GROUP DIVISION OF LOCKHEED AIRCRAFT CORPORATION, SUNNYVALE, CALIFORNIA	
DR J. ZOOZAK	INTERNAL ARR'GMT MOLAB CABIN	
CHK		
SUPV		
STRESS		
ENGRG		
ENGRG		
APPROVED	CODE IDENT NO. 06887	DRAWING NO. ALSS-1000-002 REV D
APPROVED	SCALE 1/8	SHEET

TABLE 2-7

CABIN SYSTEM MASS

1.	Cabin Structure	1101	500
2.	Controls and Displays	91	42
3.	Crew Systems	123	56
4.	Environmental Control System	179	81
5.	Radiation Protection	75	34
6.	Thermal Control (mission and storage)	285	130
7.	Miscellaneous	181	82
8.	Expendables		
	ECS	366	168
	Crew Systems	23	10
	Total	2424 lb	1103 kg

2.4.1 Cabin Configuration and Structural Design - A variety of cabin configurations and subsystem alternative designs were generated to meet the requirements of launch envelope limits, compatibility with other vehicle systems, and manned operations. Provisions for the latter include two-man airlock, scientific station, driving station, two-man sleeping, doff/don of space suit in each compartment, and emergency operations.

Six basic configurations were studied and evaluated on the basis of relative weight, crew safety, crew comfort, habitability, and reliability. The alternatives were: (I) horizontal cylinder, aft airlock, (II) modified horizontal cylinder, aft airlock, (III) modified, front airlock, (IV) modified, side airlock, (V) small, modified, aft airlock, (VI) vertical cylinder, external airlock. In addition to weight, volume and reliability comparisons, ratings were made as summarized in Table 2-8. Based on these ratings and comparisons, Configuration I was selected.

The cabin structure is divided into 3 basic assembly units, the nose assembly, forward cabin assembly and airlock assembly. The structural layout of the cabin is shown in Figure 2-5.

2.4.2 Life Support - The life support system is defined to include temperature control of the crew, cabin, and internally mounted equipment; the atmosphere control functions of carbon dioxide removal, trace contaminant control, oxygen supply and pressure control including ingress and egress considerations; and the crew systems functions of food supply, waste management, personal

A	REDRAWN
B	REVISED
C	REVISED
D	ENGINEERING RELEASE RE-A13 [illegible] 2-17-65 T.M.

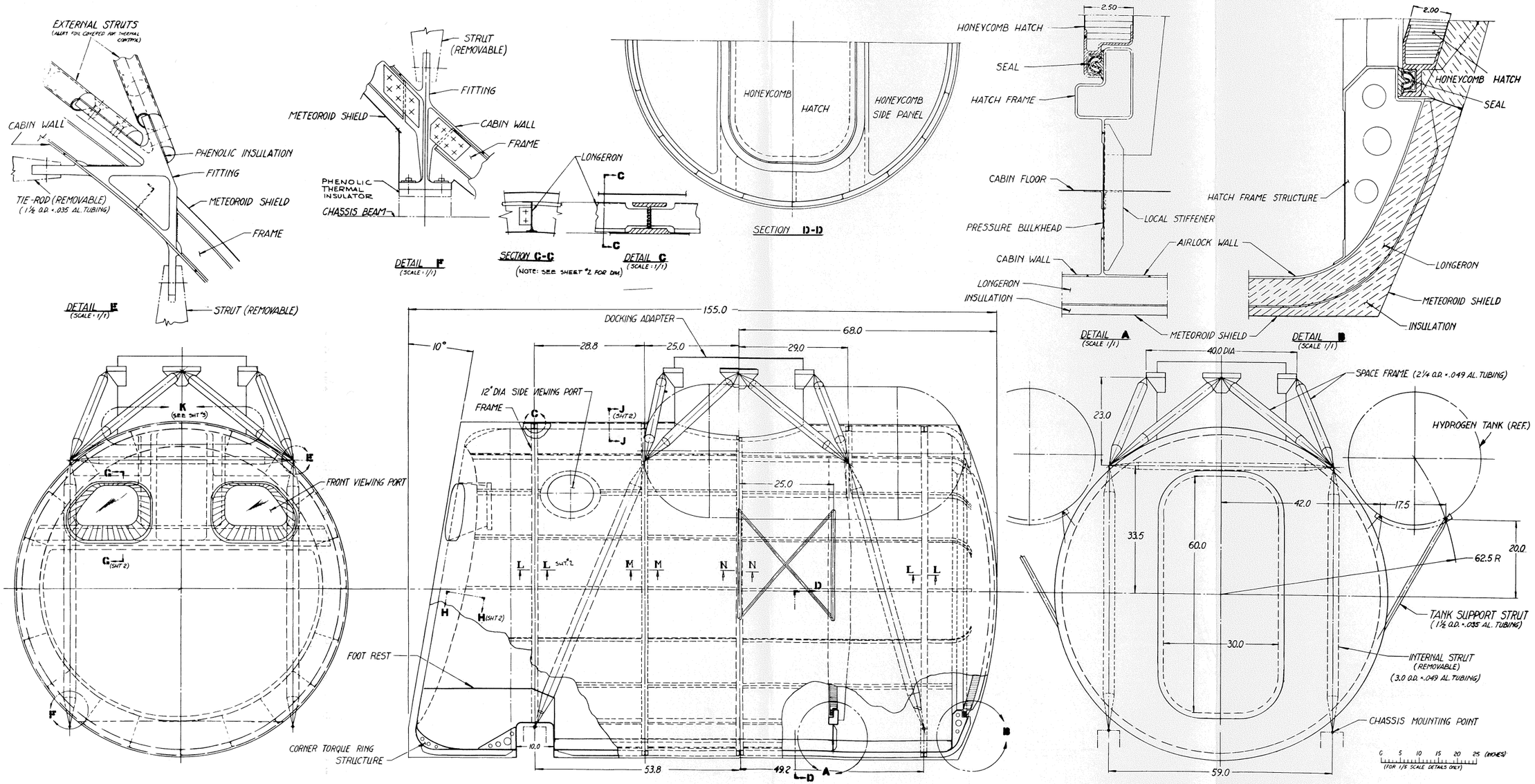

DATE 2-5-65	LOCKHEED MISSILES & SPACE COMPANY, A GROUP DIVISION OF LOCKHEED AIRCRAFT CORPORATION, SUNNYVALE, CALIFORNIA
DR A. OLSSON	STRUCTURE MOLAB CABIN
CHK	
SUPV	
STRESS	
ENGRG	
ENGRG	
APPROVED	CODE IDENT NO. 06887 · SIZE · DRAWING NO. ALSS-1100-001 · REV D
APPROVED	SCALE 1/5 · SHEET 1 OF 3

Figure 2-5

TABLE 2-8

RATING OF LIFE SUPPORT CABIN CONFIGURATION

Criteria		Configuration					
		I	II	III	IV	V	VI
Safety	Structural safety margin	+	0	0	0	0	+
	Compartment redundancy	+	+	+	-	+	-
	Crew rescue	+	0	-	-	-	+
	Wall accessibility for structural repair	0	0	-	-	-	0
	Location of exits	+	+	-	0	0	+
Comfort	Anthropometric requirements	+	0	0	-	-	0
	Ingress/egress provisions	+	0	0	-	-	+
	Available free volume	+	0	-	-	-	+
	Sleeping provisions	+	+	-	-	-	-
	Privacy	+	+	+	0	+	-
Habitability	Arrangements of work stations	+	+	-	-	-	0
	Maintenance accessibility	0	0	-	0	-	+
	External visibility	0	0	0	0	0	-
	Aft emergency driving station	0	0	-	-	0	0
	Available control/display area in cockpit	+	+	-	0	0	+

hygiene provisions, internal lighting, and emergency and accessory equipment. The following concepts for each life support system function were selected as a result of detailed analysis of several candidate approaches.

Subsystem	Selected Concept
Temperature Control	Space Radiator
Humidity Control	Condensation
Oxygen Supply	Subcritical Cryogenic Storage
Carbon Dioxide Removal	Lithium Hydroxide
Trace Contaminant	Leakage and Charcoal
Ingress/Egress	Lock and Lock Pump
Food Supply	Freeze Dried Food
Waste Management	Chemically Treated and Stored
Personal Hygiene	Cleansing Pads, Razors, Edible Dentifrice
Internal Lighting	Incandescent/Electroluminescent

The temperature control of the crew, life support equipment, internally mounted electrical and scientific equipment, lighting, and fuel cells was studied

to provide an integrated active mission phase thermal control system. Several trade-off studies were conducted to select radiator fluid, heat rejection method, radiator surface coating, radiator type and configuration, and the best use of available water.

The radiator fluids considered were glycol, Fluorochemical 75 (FC-75), Monsanto MCS 198, and gaseous oxygen or hydrogen. FC-75 was selected because it provides reasonably low temperature operation without the high power penalty associated with high viscosity at low temperature or density. The basic heat rejection method used a space radiator augmented by cooling provided by the cryogenic oxygen and hydrogen used by the fuel cell. An optical solar reflector (α = 0.05, ϵ = 0.84) was selected as the radiator surface coating because of its favorable surface characteristics and the fact that it has been successfully qualified for space use.

Studies indicated very little difference between dual and integrated radiators, so dual radiators for power system and environmental control system were selected in order to provide maximum design flexibility and to minimize interfaces by separating the design problems. A computerized thermal analysis was performed on all MOLAB systems including the cabin and life support systems. The analysis accounted for the effect of each system upon the others and included three different lunar conditions: noon, twilight, and night. In addition, computer runs were made accounting for all operational situations from earth prelaunch to MOLAB deactivation at the completion of the scientific mission phase.

Adequate water is available from the fuel cells, metabolic water, and the reaction of CO_2 with LiOH.

For the radiators, the best storage phase protection method is folding, with remote or manned unfolding capability.

Single panel, redundant tube radiators for both ECS and fuel cell were selected because of light weight. A radiator optimization study established that tube characteristics of 12-ft length, 0.1 in. inside diameter, 2 in. spacing, and 0.015 in. fin thickness are optimum. Dust removal uses cold gas jets for simplicity. The resulting radiator design is a dual, folded, single fluid panel, redundant tube radiator.

Figure 2-6 is a schematic of the integrated environmental control system. The system provides (1) a suit loop oxygen circulating system that provides temperature and atmosphere control of the suits and atmosphere control of the cabin; (2) temperature control units for cabin and lock; (3) a lock pump for ingress/egress operations; (4) a secondary coolant system to transfer heat from the suit loop, cabin and lock heat exchangers, lock pump, cabin electronics, and fuel cell to the space radiators; (5) a water management system that provides

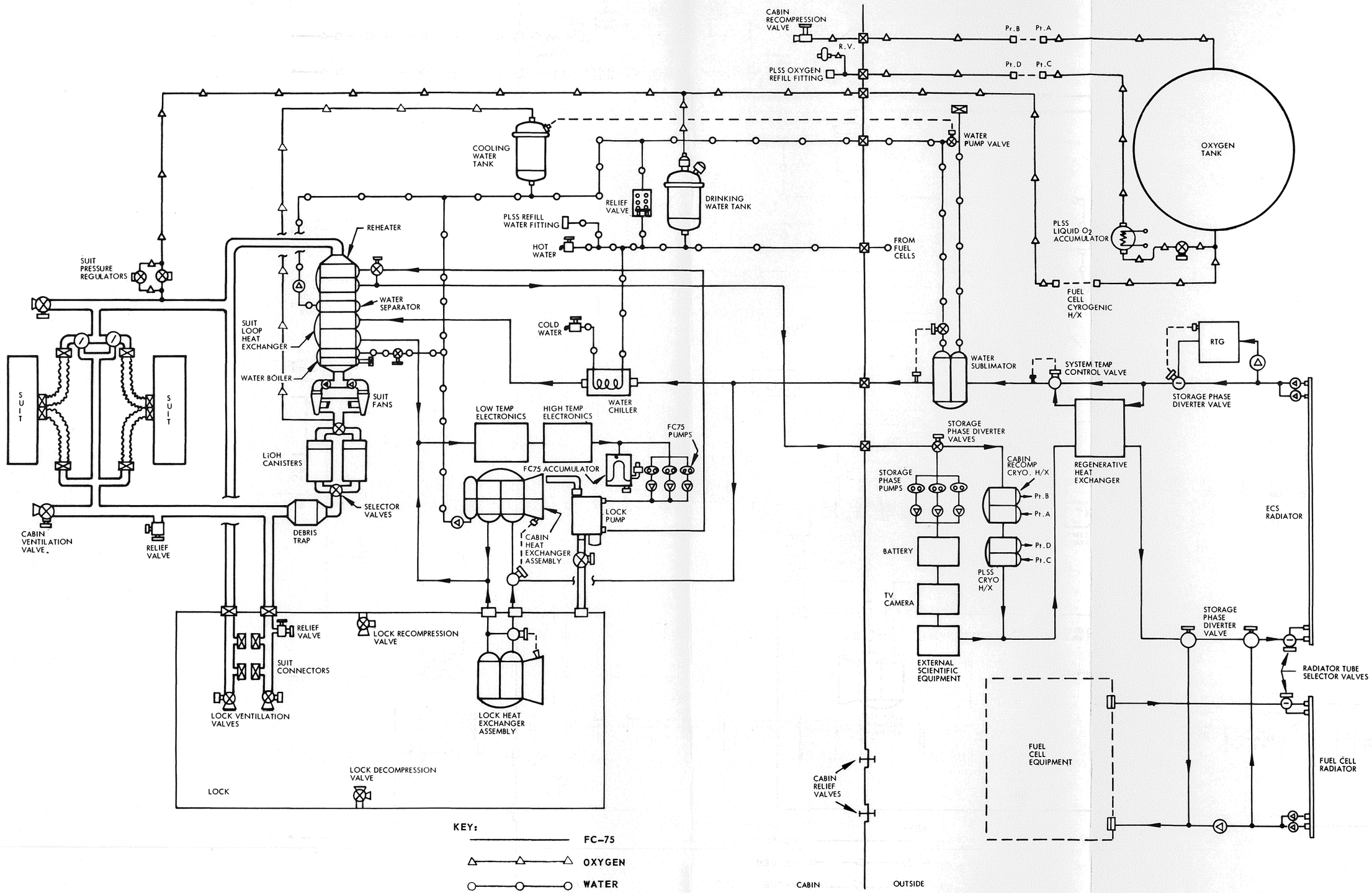

Figure 2-6 Integrated Environmental Control System

storage of drinking and cooling water and disposal of excess water from the fuel cells, and condensed atmospheric water; (6) and an oxygen supply and pressure control system.

2.4.3 Human Factors Engineering - Three major areas were considered: control/display requirements and work station design; crew provisions and habitability requirement; and mockup design verification studies.

A systematic human factors engineering methodology was applied in defining crew functions and tasks. Informational requirements of the crew and available control options were identified and translated into subsystem control panels and subpanels utilizing standard human engineering principles of panel layout. These panels were configured into a three-work-station concept for the MOLAB (see Figure 2-7): (1) a two-man forward cockpit provides a capability for driving the MOLAB, performing navigation functions, monitoring the life support subsystem power equipment and the TV subsystem and communications functions; (2) the scientific work station provides the crew with the means for performing scientific work with lunar speciments and a capability for recording scientific data as well as monitoring the status of the surface astronaut and externally placed scientific instrumentation (a "glovebox" accepts lunar speciments); and (3) the aft driving station provides for emergency driving from the airlock in cases where the MOLAB is immobile in a forward direction or if a pressure failure occurs in the forward cabin.

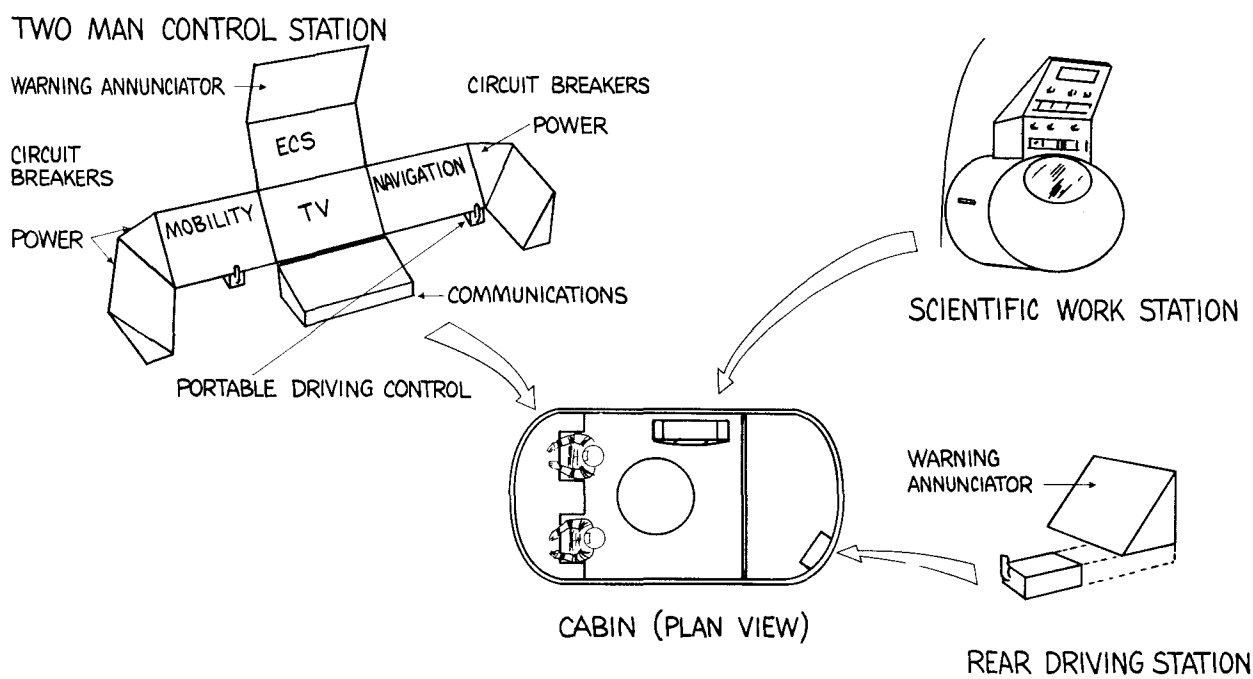

Figure 2-7 Control Display Areas

Habitability encompasses a wide variety of environmental and crew factors which contribute to the formation of a comfortable, life-sustaining working and living environment. Analysis of advanced systems operated in exotic environments has resulted in the identification of potential crew performance degradation factors attributable to inadequate habitability features. Techniques for reducing or eliminating decrements in crew performance were applied in developing the MOLAB design. Major emphasis was placed in the following areas:

1. Volumetrics. - Total volume available within the MOLAB is 452 ft^3. When volume occupied by equipment systems is taken into account, the total free volume available to the crew is 271.2 ft^3. This exceeds in large measure the NASA required minimum of 175 ft^3 free volume.

2. Anthropometrics. - Available free volume was converted into maximally usable volume by selecting design dimensions for crew provisions which accommodate the 5th through 95th percentile suited and pressurized astronaut.

3. Environmental Factors. - Tolerable limits for such environmental factors as temperature, airflow, humidity, noise, vibration, and CO_2 concentration were specified. In addition, provisions for waste management, feeding, personal hygiene, illumination, solar flare shelter habitation, and sleeping were optimized within the constraints of the lunar operating environment.

4. Behavioral Considerations. - Potential psychological problem areas were identified and techniques for alleviating these potential problems were recommended. The psychological stress factors considered were isolation, confinement, hostile environment, and severity of work burden.

A corollary mockup study conducted in a full-scale cabin system mockup verified the adequacy of the MOLAB life support cabin in terms of human factors, habitability and design engineering considerations. The following aspects of the MOLAB design were evaluated by mockup simulation techniques: arm reach and visibility of control display elements; external visibility; location of control panels within work stations (forward work station evaluation is shown in Figure 2-8; measures taken to guard against accidental activation of controls; measures taken to prevent injury to crew members; suit don/doff capability within the confines of the airlock; solar flare shelter habitability; adequacy of hatch dimensions; sleeping provisions; eating provisions; scientific work station; aft emergency driving station; and external egress provisions through aft hatch and docking hatch.

2.5 POWER SYSTEMS

The power systems provide electrical power during the inflight, debarking, lunar storage, and scientific mission phases. The electrical power requirements vary from a minimum of 10.5 watts during the storage phase daytime to

Figure 2-8 Suited Pressurized Subjects at Forward Work Station

a maximum demand of 6 kw during the manned mission phase. The power system also provides approximately 1000 watts of thermal power for storage phase thermal controls. Figure 2-9 shows the power system interface block diagram and Table 2-9 gives a mass summary.

TABLE 2-9

POWER SYSTEM MASS SUMMARY

Primary Power		324.0
Fuel Cell Assembly #1	136	
Fuel Cell Assembly #2	136	
Accessories Assembly	48	
Water for Checkout	4	
Secondary Power		78.0
Battery #1	31.8	
Battery #2	31.8	
Potting	3.4	
Case	11	
Auxiliary Power		51.9
RTG, heat exchanger and radiator	32.4	
Shield	19.5	
Conditioning and Distribution		37.0
Conditioning and Junction Box	30	
Wiring	7	
Total		490.9 lbm

There are four power systems: primary, secondary, auxiliary, and power conditioning and distribution (PCD). The PCD system has electrical interfaces with other MOLAB systems and power subsystems. During the inflight/storage phases, the auxiliary power furnishes 24 to 32 VDC to the various systems and the secondary power subsystem for battery charging. During peak load demands, the auxiliary and secondary power subsystems furnish the load requirements jointly at approximately 24 VDC. During the scientific mission phase, the primary power furnishes 20 to 31 VDC to the PCD, and the battery stabilizes the regulated bus at 24 v during peak mobility demands. Prior to primary power activation, the battery furnishes the energy required for fuel cell warm-up.

The primary, secondary, and auxiliary systems have the following fluid interfaces with the cabin and mobility systems; (1) FC-75 lines from fuel cell radiator and ECS to primary power, (2) cryogenic oxygen (240 to 100 psia and -230 to -255°F) to primary power, (3) cryogenic hydrogen (600 to 100 psia

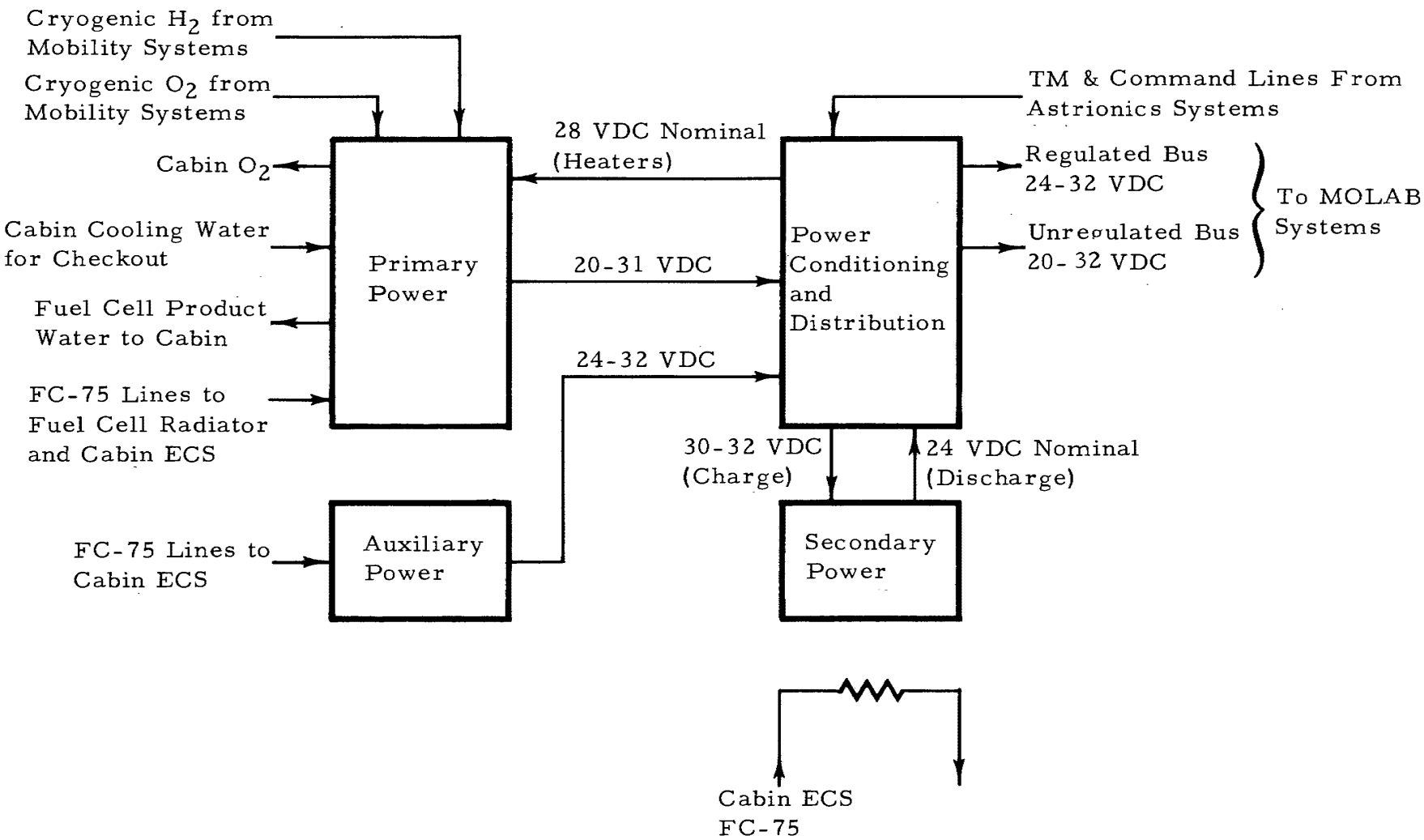

Figure 2-9 Power System Interface Design

and -410°F or higher) to primary power, (4) fuel cell product water (190°F) to cabin system, (5) oxygen (-50 to +200°F) to cabin system, (6) FC-75 coolant lines from cabin system to auxiliary power, and (7) FC-75 lines from cabin system to secondary power.

2.5.1 Primary Power - The primary power system consists of two Pratt and Whitney fuel cell assemblies rated at 2.25 kw each and a primary power accessory package. Each fuel cell assembly consists of a primary loop (recirculating hydrogen and water vapor fluids), a part of a secondary coolant loop (FC-75 fluid), a storage phase thermal control loop (FC-75 fluid), and reactant lines. The primary power accessory package consists of the coolant pumps, cryogenic heat exchangers, and gaseous H_2 and O_2 for lunar checkout. Parts of this package are common to the secondary loops from the two fuel cell assemblies.

The primary loops transfer waste heat from the fuel cell stacks to the secondary loops, condense water vapor from the fuel cell stacks, and supply product water to the cabin system. The primary regenerators maintain the fuel cells in thermal equilibrium over the power spectrum. At high power level operation, these regenerators are bypassed. At reduced power level operation, the heat leaving the fuel cell stacks is conserved by circulating the fluids through the regenerators, and the bypass flow rates are controlled by the fuel cell stack temperatures.

The secondary loops transfer the fuel cell waste heat from the condensers to the fuel cell radiator. The functions of the secondary regenerator are similar to the primary regenerators, and the bypass flow rates are controlled by the condenser hydrogen exit temperature.

An auxiliary heat exchanger is provided for each fuel cell assembly for heat rejection during storage phase fuel cell checkout and for emergency operation if a failure occurs in the secondary loop. The fuel cell assemblies can be operated using the auxiliary heat rejection method as long as cooling water is available from the cabin system.

During the storage phase, the ECS coolant loop will be connected to the secondary coolant loops for fuel cell temperature controls. The warm FC-75 fluid will flow through the secondary loops and around the fuel cell stacks, maintaining the fuel cell temperature at 0°F or higher during the storage phase.

A cryogenic heat exchanger is provided to condition the fuel cell reactants and cabin oxygen.

2.5.2 Secondary Power - The secondary power system consists of two sealed rechargeable silver-zinc batteries. Each battery is made up of 16 series-connected cells and rated at 1800 watt-hours at a 24-volt discharge cycles with the energy required in the range of 350 to 1000 watt-hours. The batteries are

connected in parallel and the total capacity is 3600 watt-hours. The depths of discharge to meet the storage requirements range from 9.7% to 28%.

2.5.3 Auxiliary Power - The auxiliary power system consists of a radioisotope thermoelectric generator (RTG), heat exchanger, radiator and shield. The RTG furnishes both electrical and thermal power to the other MOLAB systems and is the primary source of power during inflight, unloading and storage mission phases.

During the storage phase, at night, the electrical output is greater than 60 watts at 30 volts and approximately 1000 thermal watts are delivered to a fluid loop for transfer to other systems for thermal control. The electrical power is used to run the thermal control pumps, heaters, experiments and the S-band receiver. During this time, shutters surrounding the RTG are closed to conserve heat.

During the storage phase, in the day time, the shutters are open and the RTG heat is radiated to the vehicle surroundings. There is no fluid circulating through the heat exchanger and the radiator temperature rises to dissipate the heat. The electrical output is down during the day to a level exceeding 50 watts at 30 volts.

The biological shield reduces the nuclear radiation within the working area of the cabin to a level of 20 millirem/hour. The entire auxiliary power subsystem is mounted in the center of the front of the vehicle within the shuttered enclosure.

2.5.4 Power Conditioning and Distribution - This system performs the functions of distribution, regulation, and fault detection and isolation for the power system. The system consists of a junction box in the mobility controller, the cabling interconnecting the power systems, and some of the cables connecting the power systems to the other MOLAB systems.

During the storage phase all of the loads are tied to the battery bus where the voltage is regulated to 28 ±4 volts. During the scientific mission phase almost all the loads are tied to the fuel cells. Except during periods of peak mobility demands the fuel cell voltage remains with the 28 ±4 volts limits. During the peak mobility demands when the voltage can drop to levels near 20 volts for less than a minute some of the loads are temporarily switched to the battery bus.

The batteries are charged from the RTG output and a shunt regulator keeps the voltage on the battery bus from rising above 32 to prevent damage to the batteries or the RTG. A comparactor circuit in the battery leads senses an unbalance in charge current and checks the battery open circuit voltages to determine if either battery voltage is low. A faulty battery would

not be switched back on the bus. The fuel cells are protected by a reverse current detector which would switch out a fuel cell if it became faulty. Overload relays are provided for other systems which do not have protective circuits.

2.6 ASTRIONICS SYSTEMS

Astrionics encompasses the communications, navigation, television, and command and control systems.

The communications system includes the vehicle antennas, and RF amplification and modulation equipment. Data handling equipment has also been placed in this system because of the close interface existing between the data and RF functions. Direction finding equipment, although incorporated for navigation purposes, has been considered a part of communications because of the unique propagation considerations involved.

The navigation system provides an accurate celestial position fix mode of operation for use when the vehicle is stopped and a somewhat less precise dead-reckoning mode to provide continuous position data while the vehicle is in motion. Back-up operation is accomplished via tracking data from the communications system.

The TV system is composed of five camera assemblies and an on-board monitor unit. Two assemblies are outside the vehicle: a stereo pair for viewing the forward area and providing remote control data, and a single camera giving a rear view for both manned and unmanned operation. Three cameras are mounted inside the vehicle, two in the forward cabin and one in the airlock to give the ground station operators a means of following the astronauts' movements.

The command and control system includes only a signal distribution and switching unit. It is a form of master junction for all electrical signals.

System cabling has not been included in the astrionics systems. The responsibility and the weight of this item has been assigned to the cabin system. Similarly, most of the smaller sensors (thermocouples, strain gauges, telemetry current and voltage pick-offs, etc), have been assigned to systems other than astrionics. They are considered to be a part of and included in the various system hardware implementations.

2.6.1 Communications System - The MOLAB communications system study, based upon the requirement that the necessary services be implemented with the maximum use of Apollo hardware and be compatible with other elements of the manned lunar program, concentrated primarily on those problems peculiar to the MOLAB mission.

Communication links among the various elements of the MOLAB mission have been analyzed. All functions including TV, telemetry, and voice communications proved feasible for MOLAB-to-earth via S-band; however, only narrow band telemetry and voice services were adequate for the MOLAB-to-Apollo CSM link via VHF; and insufficient margins were obtained for all services from the MOLAB-to-LEM.

Command and voice functions from earth-to-MOLAB can be provided at S-band with substantial margins using an omni-directional antenna on the vehicle. Command and voice can also be provided from the Apollo CSM via VHF; however, use of the command link is limited by the lack of television, the intermittent line-of-sight with the CSM, and the substantial modification to the command module. Transmission from LEM-to-MOLAB is limited to a CW beacon for direction finding. These functions are summarized in Table 2-10.

TABLE 2-10

COMMUNICATIONS FUNCTIONS

Link	Frequency Band	Services
MOLAB-Earth	S-Band	Voice - 6 kc Telemetry - 51:2 kbps Television - 500 kc
Earth-MOLAB	S-Band	Voice - 6 kc Command - 1 kbps
MOLAB-CM	VHF	Voice - 3 kc Telemetry - 1.6 kbps
CM-MOLAB	VHF	Voice - 3 kc
LEM-MOLAB	MF	Direction Finding - 100 cps
Astronaut-MOLAB	VHF	Voice - 3 kc Bio-Medical Telemetry (7-channel analog)
MOLAB-Astronaut	VHF	Voice - 3 kc

The MOLAB antenna systems include a deployable 4-ft parabolic dish at S-band, S-band and VHF cross-dipole omni antennas on a common mast, and twin air core loops and 12-ft whip antenna for direction finding. These choices were made after comparison with other techniques. Phased arrays were considered as an alternate to the servo driven S-band dish;

several fixed type antennas were considered for both VHF and S-band including cavity-backed spirals, discones, and horns. A ferrite core antenna was investigated for the direction finding, but proved to be unfeasible in the lunar environment.

Several S-band tracking techniques were postulated for the MOLAB vehicle. The RF monopulse technique is recommended with the use of an earth IR seeker as a primary alternate. The choice here was difficult since the performances were comparable and the Apollo program had already chosen the IR detector. However, there is sufficient variation between the Apollo and MOLAB dynamic environment to warrant the change.

Telemetry and command requirements for the MOLAB were derived from each of the MOLAB on-board systems. The conclusions drawn from this study were that the Apollo digital command system would be compatible with the MOLAB requirements provided proper formats and coding were chosen for the remote driving commands, and that normal mode telemetry required for operation and monitoring of the vehicle could be transmitted at the lower rate of 1.6 kbps. Scientific data would require the higher data rate of 51.2 kbps.

Preliminary requirements were derived for the provisions of on-board system monitoring, trend evaluation and critical component analysis via a data processor. Operational computations in support of the mission are also recommended.

Consideration was given to the use of an up-link television service and its merits with respect to an on-board teleprinter. The television link is technically feasible; however, it does require some modifications to both the existing ground station and spacecraft equipment, e.g., (a) replacement of the PRN modulators and demodulators with subcarrier modulators and demodulators to avoid interference with the voice and TM subcarriers, (b) widening the transmitter and receiver bandwidths, and (c) addition of appropriate filters and video amplifiers.

A teleprinter such as that being considered for the Apollo CM could be used through the audio channel without modification to the present equipment, but at the cost of some reduction in picture quality, reduction in information rate, and slight increase in weight.

Since no decisive requirements were found for up-link pictorial data, neither approach was incorporated in the MOLAB system.

2.6.2 Navigation System - The navigation system for the position fix mode uses a periscopic theodolite for celestial sightings in conjunction with a static inclinometer and a special purpose computer to manipulate the input and lunar ephemeris data. Position fixing is a manned operation only.

The dead-reckoning technique employs vertical and directional gyros, wheel revolution data derived from the four-wheel tachometers, and the computer to perform the continuous determination of position relative to the fix point. Homing to the LEM is facilitated by a direction finder operating on a narrow band medium-frequency signal and by visual sighting.

Alternative emergency operation is accomplished with the use of a hand sextant, a manual computer, the position of the S-band antenna while tracking the earth station, or by information from the ground station tracking operation itself. These alternate modes are generally accomplished with greater expenditure of astronaut time and/or decreased accuracy.

The navigation accuracy of the prime system is determined first by crew safety and second by the fulfillment of the scientific mission objectives without penalizing the mission with unnecessary distance traveled or time expended. These two criteria respectively establish the system implementation for the position fix and dead-reckoning operations.

The accuracy of the position fix mode may be defined either with respect to absolute lunar selenographic coordinates or relative to an established base point (such as LEM). The accuracy of the celestial fix technique, either absolute or relative, varies approximately by a factor of 3; however, by either definition it is adequate for mission success. The source of error contributing to this variation is the uncertainty in the lunar gravity anomalies. The error with respect to absolute selenographic coordinates is 0.55 km and the relative error is 0.22 km.

The accuracy of the dead-reckoning mode is defined with respect to the previous position determined by a celestial position fix. The sources of error are the sensors, the gravity anomalies, and the vehicle dynamics. The total navigation system error is a function of position fix definition (absolute or relative), the vehicle velocity, and the distance traveled from the point of the position fix.

The maximum scientific site separation of the proposed mission is 37 km. In determining the maximum dead-reckoning error between scientific stations during a normal operation, an additional 20% was added for obstacle avoidance, yielding a 45-km distance traveled. The total error in position after traveling this distance is 1.0 km, including absolute position fix error.

The maximum MOLAB-LEM separation by a path retrace route is 194 km (162 + 20%). A traverse of this length at a 3-km/hr velocity produces an error of approximately 6.5 km. This position uncertainty places the MOLAB within the maximum LEM homing range.

The system performance is summarized as follows:

Function	Accuracy
Position Fix	0.22 to 0.55 km
Dead-Reckoning Between Scientific Stations	1.0 km
Path Retrace Dead-Reckoning	6.5 km

2.6.3 Television System - The TV system study considered the tradeoffs between a digital or an analog system. The results of many researchers in the field were compared and it was found that for lunar application the performance of the two systems was comparable. The analog approach, however, was more compatible with the unified S-band communications network being implemented for Apollo, and hence was preferred.

By human observation it was demonstrated that a stereo presentation enhanced the operator's object perception ability. A very wide camera baseline separation exaggerated the stereo effect to the extent that close-up objects images could not be properly fused. A reasonable compromise for the stereo baseline separation was determined to be 8 in.

An analysis was made to determine if a satisfactory frame rate and resolution was possible within the constraint of using the planned video bandwidth of the Apollo system. It was found that because of the time delays inherent in the two-way lunar communications link there was a maximum rate at which useful information could be sent. The resulting resolution from the frame rate and bandwidth conditions was determined to be adequate for object recognition within a suitable reaction distance at the specified vehicle velocities. Table 2-11 lists the basic TV camera parameters.

TABLE 2-11

TV CAMERA PARAMETERS

Parameter	Value
Format	Analog
Video Bandwidth	500 kc
Presentation	Stereo (forward camera only)
Baseline Separation	8 in.
Frame Rate	2 frames/sec
Aspect Ratio	4:3
Resolution	500 lines, non-interlaced
Field of View	Three positions, selectable: $50^\circ \times 37^\circ$; $30^\circ \times 22^\circ$; $5^\circ \times 4^\circ$
Camera Positioning	$\pm 65^\circ$ azimuth; 0 to -70° elevation
Exposure Time	3 milliseconds
Sensor	SEC vidicon with electromagnetic deflection, electrostatic focusing (Tube and Image Section)

A pulsed illumination technique was prepared to make maximum use of the power for this function by illuminating only when the camera photocathode was exposed. To use this illumination in the manned state, the flash rate is increased beyond the flicker perception point.

2.6.4 Astrionics System Summary - A total of 35 separate function units of hardware have been identified in the astronics system (see Table 2-12). The combined weight of these items is 431 lb (195.9 kg). The maximum power demand of these systems during certain portions of the mission, if all units are operating which could logically function together, is 528 watts. In actual practice, the duty cycles for the various equipments give rise to a much lower power demand depending upon the mission phase.

TABLE 2-12

ASTRIONICS EQUIPMENTS

Communications	Television
1. S-Band Directional Antenna, RF Unit	1. Forward Camera Unit
2. S-Band Directional Antenna, Servo Drive	2. Rear Camera Unit
3. S-Band Directional Antenna, Yoke & Support	3. Internal Cameras (3)
4. Omni Antennas, S-Band & VHF	4. TV Monitor
5. S-Band Antenna Switch	**Command and Control**
6. Diplexer and Power Amplifier	1. Signal Distribution and Switching Unit
7. Unified S-Band Equipment	**Navigation**
8. Premodulation Processor	1. Periscopic Theodolite
9. PCM TM Equipment	2. Sextant
10. Signal Conditioners	3. Directional Gyro
11. Up-Link Data Decoder	4. Vertical Gyro
12. Central Timing Equipment	5. Map Display
13. VHF-AM Transceiver	6. Display & Control Unit
14. Loop Antenna	7. Computer
15. Sense Antenna	8. Static Inclinometer
16. Direction Finder	9. Power Inverter (3 ϕ)
17. Audio Center	
18. Manual Data Input Unit	
19. Data Processor & Data Bus	
20. Mission Recorder	

The design of the astronics systems is predicated on using Apollo equipment or derivatives thereto or other existing state-of-the-art implementation. In no case was it necessary to specify equipment performance above that either demonstrated in existing hardware or that is planned for the Apollo mission itself.

The communications and TV equipment is designed to operate in conjuncation with NASA's Manned Space Flight Network (MSFN) and the navigation system can use the network's tracking capability in backup modes of operation.

2.7 TIEDOWN AND UNLOADING SYSTEM

The tiedown and unloading system secures the MOLAB to the LEM/Truck during all conditions of preflight, launch, flight, and lunar landing, and provides the means for transferring the vehicle from the LEM/T to the lunar surface.

The system which has been designed to satisfy these requirements consists of equipment which may be divided into four general categories according to their function:

1. A tiedown assembly provides the rigid support required between the LEM/T and the MOLAB chassis during transit and landing. Additional support is provided on each wheel to absorb inertial loads which might damage the wheel suspension mechanisms. The assembly includes the provision for severing all tiedown supports.

2. A variable azimuth assembly provides capability for rotating the MOLAB to the most favorable orientation for unobstructed debarkation.

3. A debarking assembly consists of a folding ramp and winch-drive mechanism used to lower the MOLAB from the LEM/T to the lunar surface.

4. A control assembly provides the switching necessary to perform all functions via remote control commands.

The tiedown and unloading system has been designed to meet all of the listed requirements. The design is relatively straightforward and within present state of the art. The total system weight is 352.7 lb, including LEM/T attachment fittings and structure. Provisions are included for both remote control and manual operation by a single astronaut. Figure 2-10 illustrates the unloading sequence.

2.8 GROUND SUPPORT EQUIPMENT

MOLAB ground support equipment (GSE) is defined to be all ground-based equipment required to support the flight hardware during the prelaunch and mission phases. Portions of the GSE will be used during the factory phase for MOLAB acceptance tests.

The GSE can be divided into four basic groups as follows: (1) electrical test sets including acceptance checkout equipment (ACE); (2) mechanical test equipment; (3) handling equipment; and (4) operating ground equipment (OGE).

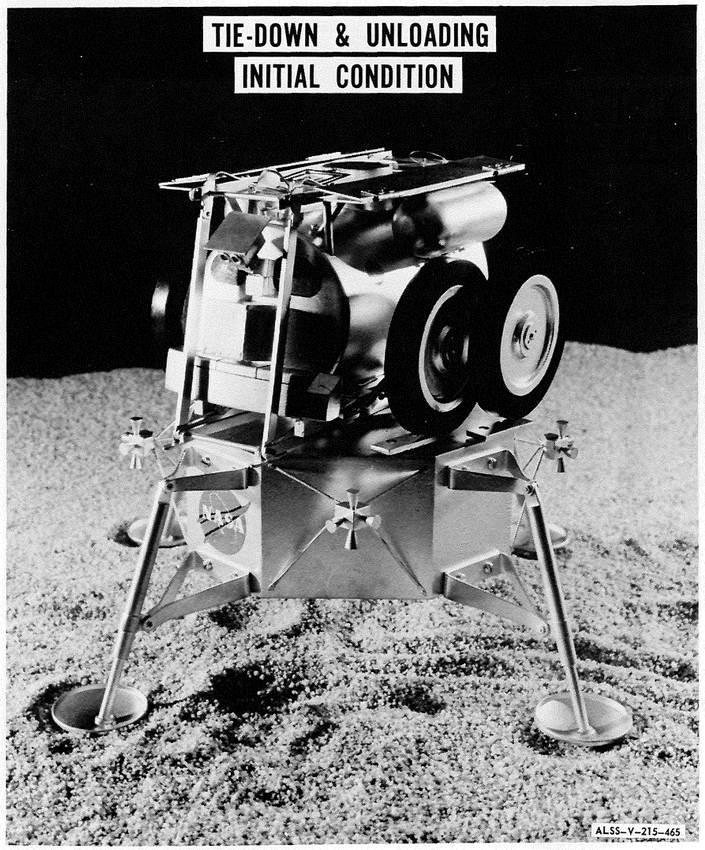

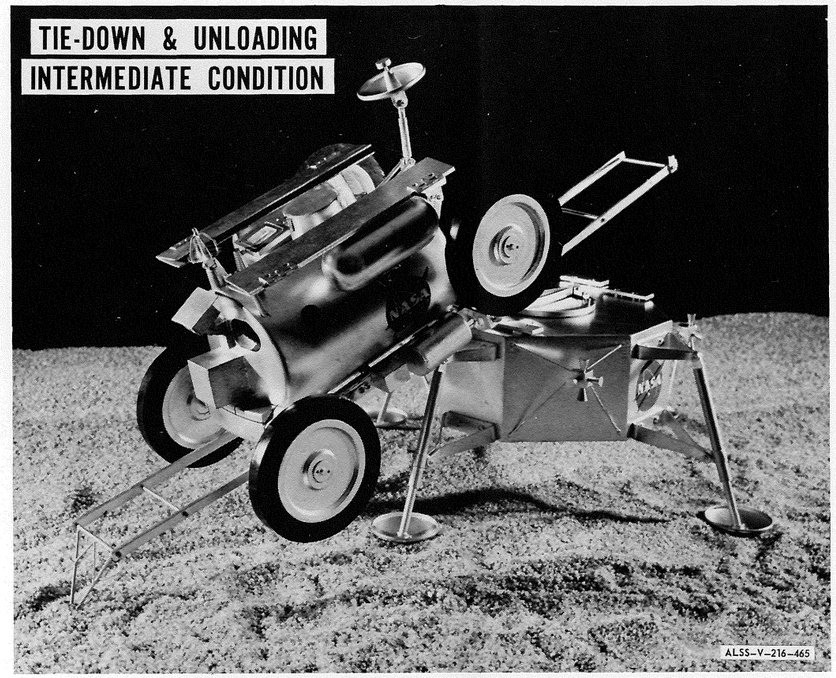

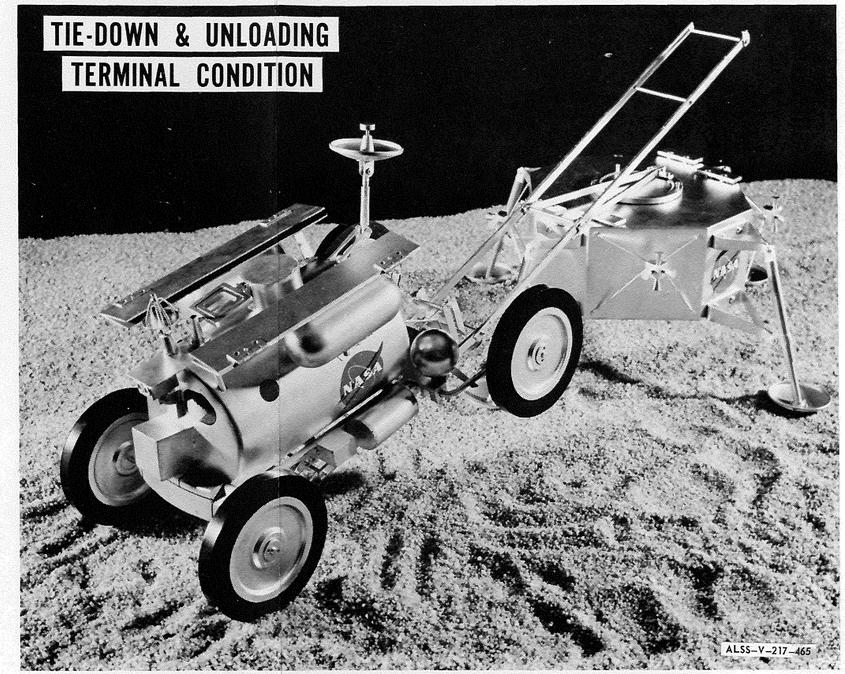

Figure 2-10 Unloading Sequence

The ACE is a versatile test equipment group capable of controlling complete system tests. The mechanical test equipment is used for cabin and plumbing leak checks, purging, heat transfer checks, environmental control tests, and other tests. It consists of such items as a helium leak detector, cryogenic tank level indicator, and metabolic loading simulator.

Handling equipment is used for transportation, hoisting, vehicle support, fuel loading, etc, and includes such items as: shipping container, hoisting adapter for lifting MOLAB, test and relocate stand for cradling MOLAB during test and movement, and fuel handling equipment for fuel loading. The OGE is used to control and monitor MOLAB from the time of launch to mission completion. This equipment is located at MSCC (for mission control and monitoring, and remote driving control) and at Deep Space Stations in Madrid and Canberra (for remote control).

A MOLAB mission can be divided into three broad phases: factory, prelaunch and post launch. Ground support equipment is required to support all three phases.

1. Factory Phase - During the build-up of the MOLAB subsystems, both standard and special test equipment will be used to verify performance.

Upon completion of the integration of the subsystems into a complete MOLAB, the ACE, mechanical test sets, and handling equipment will be used for MOLAB acceptance and qualification testing.

2. Pre-launch Phase - The support equipment used during the prelaunch phase at MILA will be identical to that used during the qualification and acceptance testing at the factory. This procedure will allow for similar test procedures and for the generation of meaningful trend data.

3. Post-launch Phase - This post-launch phase is initiated at the point of launch from MILA. During the complete mission, control and monitoring is accomplished with equipment located at MSCC and at two of the three Deep Space Stations.

2.9 SYSTEM ANALYSIS

Vol. II, Book 10 presents the results of analyses performed on the MOLAB mission and the MOLAB vehicle system. It contains an operations analysis, a crew safety analysis, an analysis of probability of mission success, and a remote control analysis. These sections form an integral part of the basis for the over-all MOLAB preliminary design, and an evaluation of over-all system performance.

2.9.1 Operations Analysis - The basic mission requirement is for two astronauts on MOLAB for 14 days from lunar mid-morning to lunar mid-evening with a 7-day emergency life support extension capability. A capability for 400 km travel and at least 115 hr of experimental time is required.

The astronaut activities for the 14-day scientific MOLAB mission have been detailed by means of a time-line sequence. The 14-day period covered is from LEM landing to lift-off for Earth return. The basis for the time-line sequence is the Modified Selenological Traverse (Figure 2-11) specified in Annex B of the Statement of Work.

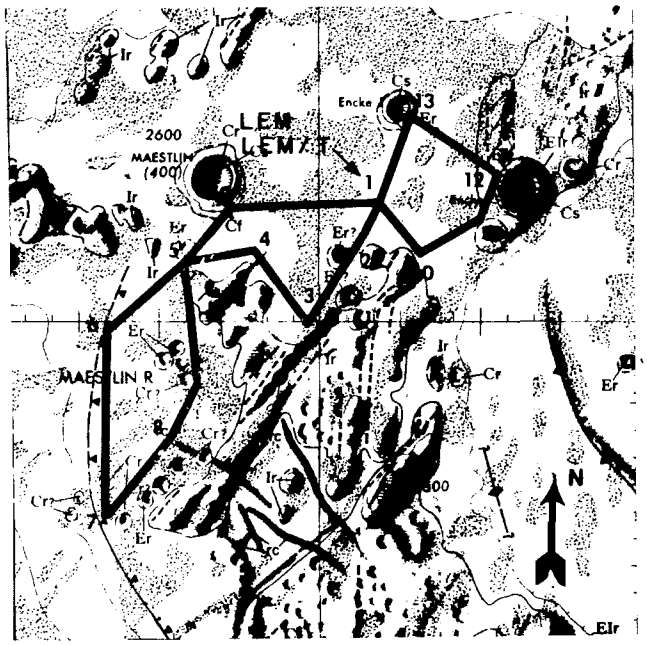

Figure 2-11 Modified Selenological Traverse

Based on the time-line analysis, a summary of the percentage allocation of astronaut time to mission activities is as follows: checkout and maintenance, 13.8; rest, 29.8; personal, 12; driving, 7.1; and experiment (including ingress-egress and data transmission), 27.2. The figure for driving time is based on a straight line station-to-station traverse of 274 km; however, the actual total distance may be as much as 400 km. The additional 126 km is allocated to: obstacle detours (27 km), scientific observation detours (27 km), local travel at LEM/T-LEM site (24 km), and local travel at 12 stations (4 km per station).

Again, using the time-line sequence as a base, a system power profile has been generated to determine the system energy requirements by specifying the off-on status of each of the system units. The system energy requirements for the 14-day operation and 7-day emergency extension are 482 and 79 kw-hr, respectively. The total energy for 21 days is 561 kw-hr. The system energy design point is presently at 700 kw-hr, providing a contingency allowance of 139 kw-hr.

Detail crew task analysis is given in Book 10 for functions of sleep, data transfer, travel, eating, hygiene, internal operations, external operations, and monitoring. A simultaneous sleep schedule for both astronauts, 7-8 hr/day, is recommended; a work/rest ratio of 13/11 is also selected.

2.9.2 Crew Safety - Because of its unique importance, an analysis of the safety of the MOLAB astronaut crew during typical lunar surface missions is presented separately from the operations analysis. The crew safety analysis consists of equipment considerations, which are both qualitative and quanitative in nature, and astronaut and environment considerations, which are solely qualitative in nature. Further, the interrelated processes of the equipment, astronaut, and environment which may lead to accidents and emergencies are also discussed. The results are conclusions regarding design criteria and safe procedures.

During a manned mission of the MOLAB vehicle on the lunar surface, the existence of those conditions which permit and ensure the safe return of healthy astronauts to LEM defines crew safety. The conditions relate to the vehicle, the astronaut, and the environment; they may be either existing, anticipated, or probable conditions.

Relative to the vehicle, the conditions of most importance are those which affect the functions of life support and mobility. None of the other basic operational functions (debarking, TV communications, experimentation) have a great effect on crew safety. The primary measure of equipment effects on crew safety is the reliability of the combination of subsystems which are pertinent to life support and mobility. These subsystems are all of the cabin, mobility, and power systems.

The capability for operation of the MOLAB in various degraded modes has a predominant effect on crew safety. Degraded mode operation is the operation of a given equipment by some alternate means or in spite of certain failures, where the resulting performance is less than that of the normal mode. The primary features of degraded modes are that they not only enhance reliability, but they also can transform a potential mission abort into a success.

By means of reliability analysis, it was determined that the probability of successful operation of life support and mobility functions, including possible abort with those functions remaining in a barely acceptable degraded mode, is 0.9844. By linearization of the reliability for a return mission, the probability of emergency return was determined as 0.9990. Combining in an appropriate manner gave 0.99998 as the total probability of MOLAB return to LEM, which defines the probability of crew safety, exclusive of astronaut and environment considerations.

Final actions in each of the defined mission emergencies have been recommended. Corrective actions may include repairs, extrication, or switching to a degraded mode. These all may allow for mission continuation. In case of failure of attempted corrective action, the procedure may be emergency return or emergency survival for an extended period. Emergency return

may involve return of a disabled exterior astronaut to MOLAB, or return via MOLAB in degraded mode, or return by means other than MOLAB. Included in the last category are a lunar flying vehicle, a small emergency surface return vehicle, or an alternate MOLAB. Walking would be a last resort.

2.9.3 Probability of Mission Success - The probability of success for the planned surface mission (on a perfectly normal mode) was derived on the basis of reliabilities and found to be 78.7%. The probability of completing an alternate mission when the planned mission must be abandoned because of an equipment failure is 19.4%. In these cases, the MOLAB is capable of traversing the lunar terrain and of supporting data collection activities, though the operations may be somewhat curtailed. However, both categories are considered successes, giving a probability of mission success of 98.1%. The remaining 1.9% is the probability that sometime before the end of the 14-day mission an equipment failure occurs which results in termination of the scientific mission and initiation of emergency life support measures.

2.9.4 Remote Control Analysis - The MOLAB vehicle must be able to perform by remote control operation at various times during its mission. Specifically, the vehicle must be able to perform all essential functions associated with unloading, start-up, traveling and maneuvering by remote control from earth. Although these functions are primarily for unmanned operations, MOLAB must also have the ability to adopt remote control operation during a manned mission at the request of the crew or by command from a ground station.

It is apparent that remote control operation must be capable of nearly all the vehicle control tasks which would be performed by an astronaut in the manned driving mode of operation. Thus, remote control equates to "driving" of the MOLAB from some remote point.

Remote control, in the context of lunar vehicle operations, may be interpreted broadly to include the activities of planning a mission, keeping track of the vehicle's position with respect to the mission objective, and driving the vehicle safely to that objective. Several functions are involved in this process, which can be separated for purposes of problem analysis. These functions are those of mission direction, navigation, guidance, and remote control. In general, mission direction establishes the mission objectives and operational strategy; navigation keeps track of the vehicle location; guidance determines where the objective is in relation to the vehicle's present position; and remote control attempts to move the vehicle toward the objective.

The analysis conducted concentrated on the major problem areas of hazard detection, vehicle performance prediction, and hazard avoidance (steering and driving strategy). The primary concern is hazard detection,

and it is emphasized relative to vehicle design analysis. Sufficient qualitative work is presented in the other areas to provide overall compatibility of the remote control concept, and a strong basis for more detailed future design.

Analysis is presented in Vol. II, Book 10 relative to various aspects of the sensing and driving operations of remote control. Most of the parametric curves developed are related to the control parameters as a function of velocity for continuous control, since this mode of control is the most demanding.

As a result of the design analysis, an overall remote control design concept is selected. The basic features are listed in Table 2-13.

TABLE 2-13

REMOTE CONTROL FEATURES

Stereo TV Cameras	
2 frames/sec	3.1 meter height
500 lines resolution	8 inch baseline separation
4/3 aspect ratio	1-3 msec shuttered exposure
Horiz FOV: 50°, 30°, or 5°	$\pm 75^{\circ}$ pan, $+15^{\circ}$ to -70° tilt
	Pan slaving to wheels
Steering Control	
Linear, wheel-angle commands	
Automotive steering configuration	
Path prediction	
Vehicle Speed	
5 km/hr maximum	
2-3 km/hr nominal	
Ground Stations	
1 at MSCC, 2 at deep space stations	Large, 3-gun color TV monitors for stereo presentation at each console
4 man teams	Extensive computations, controls, and displays

2.10 RELIABILITY AND QUALITY ASSURANCE

The reliability and quality assurance aspects of the ALSS Payloads program had a two-fold objective: first was attainment of high inherent reliability and crew safety as essential characteristics of the MOLAB design, and second, the formulation of realistic reliability and quality programs to be implemented during subsequent development. Throughout the study program, reliability was treated as a first-order consideration in generating equipment design concepts that would accept no compromise where crew safety was involved. This effort has achieved high inherent reliability; results are in the form of failure modes analysis records, reliability logic diagrams, reliability predictions, and key areas for subsequent development attention. Details are given in Vol. II, Book 11.

The over-all approach to formulating a preferred system design for MOLAB included the handling of reliability evaluation aspects in four analysis steps: subsystem concepts, alternate system concepts, preferred system concept, emergency return capability analysis. As a supplement to qualitative judgements of simplicity and failure mode backup, subsystem design tradeoff studies included numerical reliability estimates for key equipment items and components. The most significant reliability comparisons considered 4- vs 6-wheel traction drive concepts; 2, 3, and 4 cryogenic tank concepts, five ECS thermal loop configurations; three unloading configuration concepts; and TDM drive motors and associated controls.

Several of the 15 original system configurations concepts were eliminated because of system constraint or performance limitation problems, and the eight remaining system concepts were compared using inherent reliability and backup consideration rating factors of a qualitative nature. Among the four final candidates, the mobility subsystem was the most significant design variable, and a special analysis of mobility performance complexity comparison was completed.

The selected concept was analyzed to ensure that it incorporated design flexibility in all major vehicle systems. This would provide mission continuance performance and/or safe emergency return-to-LEM capabilities in the event of major equipment malfunctions or failures. Preliminary estimates for possible mission abort situations indicated that the preferred MOLAB system concept had excellent safe return-to-LEM probabilities even when significant abort emergencies were assumed to have occured at worst-case points on the mission profile. Greatest emergency-return risks occur if subsystem malfunctions take place when the MOLAB vehicle is at its maximum mission-profile distance from LEM. During preliminary design, a number of design alterations were given special reliability attention. The change of the cabin shell from a modified circular to a cylindrical shape improved potential

reliability by more efficient design for pressure loads, allowing for a greater margin of safety. Selection of a two-speed traction drive transmission in the mobility system enhanced MOLAB mission reliability by providing lower maximum stress loads in drive motors and additional emergency modes of operation in the event of transmission failure. Significant changes in the power systems involved the transition from a 3-module to a 2-module prime power source, the development of an all DC power distribution and conditioning system, and the incorporation of redundant battery units in the secondary power system.

The two-module prime power design combined with the elimination of AC power conditioning equipment resulted in over-all simplification and a better no-failure probability for the system as compared with earlier concepts, yet provides for the same or better crew safety backup in the event of major failure. Combined with redesign of the traction drive mechanisms, the normal and degraded mode reliability of the prime power system was enhanced by reduced peak stress demands.

A comparative reliability analysis of seven redundant battery configurations for secondary power resulted in the selection of dual-unit design, each unit capable of the required mission services including the worst case load-fuel cell warm-up after 6 months of lunar storage and standby.

The design integrity of MOLAB cabin wall structure for meteroid protection was verified by testing samples of wall construction at the Utah Research and Development Company. Pellets of 0.025 gram at 24,200 ft/sec were unable to puncture cabin inner pressure walls after passing through outer bumper and intershell fiberglass insulation.

Radiator design concepts for ECS and power heat rejection were re-evaluated during preliminary design. Complexity differences between design concepts were not significant. The use of water sublimators for emergency operation, or emergency return in the event of radiator failures was explored. A study of water generation and emergency usage rates during the mission validated the performance sizing, mission reliability, and emergency crew safety merits of the selected final designs.

To save weight and reduce complexity, front wheels only are steerable in the preliminary design. Effective redundancy or backup for steering exists in the capability for steering with either of the two front steering mechanisms operative, or with differential speed control of the traction drive mechanisms.

Debarkation reliability of the MOLAB was upgraded by flexible operating sequence designs, redundancy in pneumatic release mechanisms and provisions for unpowered manual unloading.

Wheel designs for MOLAB have not been subjected to formal reliability tradeoff studies to date; however, failure modes analyses of current concepts indicate that the ridged inner wheel structure design should readily provide for acceptable degraded mode operation in the event of flexible outer elements failures. Moreover, the multi-element construction of both the inner and outer wheel elements should result in normal or good performance even in the event of many localized failures in the effectively redundant rings and/or spokes. Development testing of full scale designs is required to effectively determine the true reliability, failure mechanisms, and the effects of failure of current design concepts.

The basis guideline to MOLAB astronics system design was to apply, to the greatest extent possible, the Apollo components, and it was appropriate to follow the Apollo guidelines for reliability. A reduced reliance on onboard maintenance was accepted with greater emphasis on higher reliability through design for alternate mode service and redundancy.

The basic communications approach was to provide as many parallel services as possible without an intolerable penalty in equipment weight and power requirements. Hence, for example, the normal down-link telemetry is backed-up by single service telemetry at S-band using the omni-antenna, and by VHF relay via the Apollo CSM. A reliability analysis was performed on a per service basis using the various parallel service paths. In addition to the full service parallel paths, emergency voice and key were included as degraded modes.

The less reliable components within the communications system were kept out of the series path of critical services. It is possible for the data processing modes (e.g., onboard system and critical component performance analysis) to be backed-up via the earth services. Hence, the data processor is not in the telemetry service chain of required components.

The mission recorder was added primarily as a reliability backup to the telemetry modes in case of complete failure of the multiple paths, since the data collected can be hand-carried back to earth.

As constrasted with the Apollo system, the use of integrated microcircuits is recommended for the MOLAB where the power and weight savings are required for the system capabilities provided. At the time of Apollo system definition, integrated circuits tests were reporting poor reliability figures compared to discrete components. The primary source of integrated circuit failures have been a result of manufacturing defects. New processes are being developed to overcome these problems. Hence, the recommendation that liberal use of integrated microcircuits be implemented in the MOLAB communications system, wherever feasible.

The principal item within the television subsystem to receive special reliability attention is the camera tube itself. Several types of camera tubes were investigated with respect to their functional performance and their resistance to the possible damaging effects of a space environment. The major concern in the use of the SEC vidicon was its relatively short development history, particularly in terms of the space environment. However, cameras using tubes of this type were fabricated and have been delivered to NASA for their evaluation,and the decision has been made to use this tube in the Apollo mission as a part of the camera which will be taken to and used on the lunar surface. Based on the completion of this development by mid 1966, it is expected that there should be confidence that a satisfactory SEC vidicon camera be made available for use on the MOLAB. The use of the same basic camera unit in all internal and external applications affords interchangeability and allows a concerted effort in the development program toward a single basic camera unit which will be highly reliable.

In designing the MOLAB navigation system, the evaluation of the techniques and design implementations investigated were limited to those which meet the requirements for high reliability. A form of backup, in support of system reliability, was provided by the design of the dead reckoning and homing implementation; that is, the dead reckoning accuracy and the range of homing are greater than required under normal mission conditions. In this manner, a safe return to the LEM vehicle from any point in the mission is provided by just the position fix equipment or just the dead reckoning and homing equipment. Further alternate modes are provided if the lunar surface conductivity is within the anticipated range, extending the homing range from minimum designed 10 km to this mission extremity, and providing still another technique for return to LEM.

Navigation equipment backup is provided in the areas of celestial sensors (sextant backs up the periscopic theodolite), displays (the map display and drivers display back-up the navigation control and display panel), dead reckoning azimuth (the earth trackings S-band antenna backs up the direction gyro), odometer (a tachometer is on each of the four wheels) and computation (all data are transmitted to earth for back-up computation).

System reliability was a major influence in the selection of other specific navigation implementations. For example, a manual periscopic theodolite was selected rather than an automatic star tracker, and a conventional ball-bearing gyro was selected over the more accurate but more complex types.

2.11 LUNAR FLYING VEHICLE INTEGRATION

In accordance with the Statement of Work, consideration has been given to special equipment and methods by which the crew could be returned to the LEM in the event the MOLAB becomes immobilized. A possible special equipment item was designated by NASA/MSFC as a two man lunar flying vehicle (LFV). In addition to emergency return, the LFV could provide mission extension capability by enabling the conduct of experimental sorties to select sites to which the MOLAB could not travel. Details of LFV integration are given in Book 13.

The effects of integrating an LFV on the MOLAB were investigated from both design and performance standpoint. Structural modification is required in the MOLAB to accommodate the LFV during launch through lunar storage and during the manned mission phase. MOLAB mobility performance is altered when the LFV is externally attached to the MOLAB.

Geometrically, the LFV can be accommodated in the MOLAB cabin during launch with no effect on the cg restrictions. The LFV can be transported over the lunar surface mounted externally on the aft part of the MOLAB cabin and not restrict astronaut surface operations or ingress and egress. The total additional MOLAB structural weight to accommodate the LFV is 185 lb. Carrying the LFV, obstacle negotiability is degraded to 67 cm, but crevice crossing capability does not decrease. The performance in maximum speed and range capability is degraded to 13.8 km/hr and 286 km respectively, if there is no increase in the power supply.

To maintain the original speed performance, increasing obstacle negotiability to 90 cm, an additional 197 lb is required for MOLAB. To realize the original range capability would require approximately a 58 kw-hr increase in expendables and associated tankage; this translates into approximately 110 lb of additional weight. Thus, to accommodate the LFV and maintain original MOLAB performance, a total weight increase of 492 lb is required, exclusive of the LFV itself.

SECTION 3

LSSM CONCEPTUAL DESIGN

This section contains a summary of the requirements and conceptual design study for a Local Scientific Survey Module. Further material on this topic is presented in Vol. III.

Conceptual design of a Lunar Shelter/Laboratory and small Lunar Surface Vehicle originally was to be undertaken as part of the over-all ALSS Payloads design effort. This system was conceived as a single payload to be transported on the LEM truck as an alternate to MOLAB. However, in the period following the early contractual efforts, the Apollo Extension Systems (AES) Program—based on the utilization of existing hardware for early missions—was established. On this basis, redirection was received from NASA to undertake conceptual design of a Local Scientific Survey Module to be utilized with a LEM-Shelter.

Early lunar surface missions of the AES Program will be based upon modification of the LEM to provide a LEM-Shelter and a LEM-Taxi. The LEM-Taxi will land two astronaut-scientists to occupy the LEM-Shelter for exploration periods up to 14 days. Foreseeable lunar surface scientific missions conducted from the LEM-Shelter require the addition of local mobility for adequate survey area coverage, traverses to lunar surface features which are far-removed from the landing site, and deployment and transport of scientific experiment instrumentation.

The major systems of the payload under consideration are:

1. A LEM-Ascent Stage to be used as the Shelter/Laboratory
2. A Local Scientific Survey Module (LSSM)
3. A Lunar Flying Vehicle (LFV)
4. Scientific Equipment.

For purposes of this study, NASA specified 2500 lb as the payload weight available, exclusive of the LEM Shelter. A set of guidelines for geophysical and geological experiments to be performed at the shelter and on field surveys was also provided by NASA. The LFV was specified as 38-in. high, 78-in. long, and 60-in. wide; its dry mass is 350 lb and wet is 976 lb.

Therefore, the main purpose of the study was to provide conceptual designs and operations analysis of the LEM-Shelter payload systems to determine the parameters for a desired LSSM. Various payload configurations

were examined and tradeoff studies conducted. The tradeoff of particular interest is between: (1) having the LFV as part of the payload, and (2) having no LFV, but a larger LSSM or more scientific equipment.

In order to perform the payload tradeoffs among the LFV, LSSM, and scientific equipment, two distinct system cases require investigation. Case I is a system in which the 2500-lb payload is distributed between the LSSM (up to 1540 lb) and scientific equipment (960 lb minimum). Case II is a system consisting of the LFV (976 lb), LSSM (up to 1000 lb), and scientific equipment (524 lb minimum).

Nominal missions for both cases were defined from the scientific experiments guidelines. System design requirements for the LSSM were extracted from these missions to form the basis for subsystem parametric studies and concept formulation. The candidate system concepts were then synthesized and a number of Case I and Case II concepts were selected for further conceptual design.

The study program has progressed to the point of defining several vehicle concepts for the Case I and Case II systems. No attempt was made to optimize the concepts or select from among them. A first pass through the mission analysis established the preliminary vehicle requirements for the start of subsystem studies and initial system concepting. Subsystem parametric studies were conducted and preliminary subsystem concepts were established. Mission analyses have continued throughout the effort to better define the system requirements. Further efforts are required to optimize the over-all mission and establish evaluation criteria for completing the payload tradeoff study.

3.1 LSSM REQUIREMENTS

A nominal 14-day LSSM/LEM-Shelter mission was postulated for the Case I system. This mission is summarized as follows: remote drive to LEM-Taxi (6 km); mobility test and astronaut transfer (9 km); transport and set up Emplaced Scientific Station (ESS) (20 km) (drill 10-ft hole); detailed areal survey (5 sorties, 13 km each, 65 km total); 180-minute seismic surveys (2 sorties, 5.7 km each, 11.4 km total) (drill for 35 to 70 minutes); 360-minute seismic survey (18 km) (drill for 70 minutes); feature exploration (2 sorties, 25 km each, 50 km total); and return to LEM-Taxi (3 km). Total range required is 182.4 km plus a range contingency of 17.6 km for a total of 200 km and a total astronaut time (elapsed) of 64 hours.

The mission was also investigated to determine modifications to include the LFV in the mission for Case II. This mission is summarized as follows:

remote drive to LEM-Taxi (6 km); mobility test and astronaut transfer (9 km); transport and set up ESS* (8 km); detailed areal survey (5 sorties, 13 km each, 65 km total); 180-minute seismic surveys* (3 sorties, 24 km total); two days reserved for future visits with LFV; and return to LEM-Taxi (3 km). Total range required is 115 km plus a range contingency of 35 km which gives a total of 150 km and a total astronaut time (elapsed) of 45 hours.

The system design requirements for Case I and Case II are summarized in Table 3-1.

3.2 LSSM SYSTEM CONCEPTS

The candidate Case I system concepts resulted primarily from variations in the power and mobility systems. A specific, preferred concept for the astrionics system was tentatively selected based on information developed during the MOLAB preliminary design study and additional parametric investigations for the LSSM. Crew, thermal, and tiedown and unloading systems are conceptually developed for each concept chosen for configuration. The 10-ft core drill is integrated into each vehicle design. A summary of each concept chosen for configuration to date is as follows:

Concept 1. - Fixed wheel-articulated chassis mobility system. Large RTG-battery power system capable of 3 missions. Direct earth link communications system with 4-ft dish antenna. Complete navigation set.

Concept 2. - Folding wheel-rigid chassis mobility system. Battery small RTG power system capable of 3 missions. Recharge from a separate power source or at the shelter following each sortie. Direct earth link communications with 4-ft dish antenna. Complete navigation set.

Concept 3. - Folding wheel-rigid chassis mobility. Fuel cell with cryogenic supply for one mission, small RTG, small battery. Direct earth link communications system with 4-ft dish antenna. Complete navigation set. This concept requires resupply of cryogens for each mission.

The matrix of candidate for Case II resulted from variations in the mobility and power systems. The design goal is to develop a vehicle of less than 1000 lb for missions requiring inclusion of the LFV. The 10-ft core drill was considered independently of the over-all vehicle design but can be integrated physically into any of the concepts. A separate power supply was considered to assess power penalties for drilling operations.

Concept 1. - Folding wheel-rigid chassis mobility system. Large RTG battery power system capable of 3 missions. LEM-Shelter communications relay. No navigation set. This concept optimized for mobility performance within the physical stowage constraints.

*Provisions for physical integration of the 10-ft core drill have been incorporated in synthesized concepts. Drilling time is included in required sortie allowances.

TABLE 3-1

SUMMARY OF DESIGN REQUIREMENTS

Parameter	Case I	Case II
Vehicle Weight	Up to 1540 lb (700 kg)	Up to 1000 lb (455 kg)
Design Payload	600 lb (270 kg) + operator	330 lb (150 kg) + operator
Operating Radius	8 km (minimum)	(Up to 8 km) visual LOS
Total Range	200 km	150 km
Sortie Capability	13 (6 hours maximum)	12 (6 hours maximum)
Number of Missions	3/6 months	3/6 months
Energy Required	72 kw hours	30 kw hours (exclusive of drill
Storage Period	6 months	6 months
Remote Control	Earth and shelter	Earth and shelter (shelter relay)
Average Speed	5 km/hr	5 km/hr
Obstacle	50 cm	50 cm
Crevice	200 cm (astronaut assist)	200 cm (astronaut assist)
Navigation	Dead reckoning	Visual line of sight

Concept 2. - Fixed wheel-rigid chassis mobility system. Large RTG-battery power system capable of 3 missions. LEM-Shelter relay. No navigation set. This concept directed toward achieving minimum weight (as much below 1000 lb as possible). Wheel size reduced to 25-in. diameter, which has been set as a minimum to attain reasonable performance.

Concept 3. - Fixed wheel-articulated chassis mobility system. Large RTG battery power system capable of 3 missions. LEM-Shelter communications relay. No navigation set. Wheel size reduced to 25-in. diameter.

A variation to Concepts 2 and 3 has also been investigated. Upgraded communications, navigation, and power systems have been provided in

order to relax the requirement for operations within visual line of sight of the LEM-Shelter. The astrionics system uses a 2-ft dia, directional, S-band antenna for direct communication with earth (beyond shelter visual line-of-sight capability). A navigational set similar to that utilized in the Case I concepts has been added. Power capability has been increased to account for the upgraded communications and navigation equipment.

3.3 CONCLUSIONS AND RECOMMENDATIONS

The nominal mission postulated for the Case I vehicle approaches a worst-case situation, but further mission analyses should be conducted to more closely define the system requirements as to range and operating conditions (i.e., power profile and mobility requirements). Specific landing sites should be examined for location and range of interesting features. A set of traverse patterns about the specific sites should be set up and studied in detail.

The mission studies should also be more closely tied in with the over-all scientific mission objectives and equipment. An analysis of all crew activities on the lunar surface including those in the vicinity of and within the shelter is required. This would permit better definition of actual time availability and distribution and evaluation of over-all life support requirements. Crew activity schedules developed to fulfill mission objectives must reflect human performance capabilities.

A detailed analysis of crew safety including possible non-normal emergency situations attributable to either vehicle subsystem failures, environmental threats, or incapacitation of the surface operator is required. Safety requirements associated with LSSM operation are significantly more stringent than MOLAB because of the lack of a protective life support cabin within the immediate vicinity of the surface astronaut. Emergency procedures must be developed for coping with all failure modes. Realistic crew performance times in effecting these emergency measures should be determined, perhaps with simulated mockup exercises. The safe operating radius from the LEM-Shelter should be determined based on analysis of all hazards and life support capabilities. The initial studies on astronaut environmental control presented in this report should be expanded, and other factors such as radiation warning and emergency return need examination.

The over-all payload tradeoff task has not been completed. This requires that concepting efforts be completed, vehicle concepts evaluated, and a concept selected for each case. These concepts should then be placed in the framework of the total mission payload so the weight allocations and effect on scientific mission payoff can be determined.

The LEM-Shelter and its relationship to the other payload elements needs further examination particularly with respect to communications, power, and life support interfaces. For this effort, a better definition of the LEM-Shelter is required. The characteristics of its life support system, for example, will have a tremendous bearing on the surface operations including availability of time on the surface. In addition, the effect of relaxation of the envelope restrictions has not been examined.

Specific utilization of the LFV in the Case II mission required further detailing. Exactly how this vehicle would be used depends to a large extent on the nature of the site to be explored and the characteristics of the surrounding terrain. The LFV should not be considered as a separate payload but should be considered in terms of experiments requiring cooperation between payload elements. Its effect on the crew safety and mission success should also be investigated and used in the evaluation of the Case I-vs-Case II total system.

Further mission studies should include considerations of other hardware combinations. In particular, the utilization of two LSSM vehicles for certain missions should be examined in addition to the LSSM/ LFV combination. The mission analysis would investigate cooperative experiments between the two vehicles. Effects on crew safety and mission success with this concept should be determined.

The pre-manned mission use of the LSSM should be determined. This includes use of the vehicle in a remote control mode to survey the site and establish suitable locations for the manned landing as well as the gathering of useful scientific information not requiring the presence of man. The vehicle may also be used after the manned mission. In this case scientists on earth could use the vehicle to explore greater areas of the lunar surface (provided the vehicle contains a power supply not requiring use of expendables and direct earth communications).

Three vehicle concepts each were provided for Case I and Case II. These concepts are by no means exhaustive of the total range of candidates available. A basic mobility unit was derived for both Case I and Case II concepts. Thus, a four-wheel concept was utilized, with variations. Further examination of other mobility concepts is necessary to define the optimum parameters for the LSSM vehicle. However, examination thus far reveals that vehicles can be designed within the 1540-lb and 1000-lb weight allocations and available envelope which will meet all the desired objectives of the postulated mission. Further analyses of vehicle requirements which are weight sensitive (e.g., power, mobility, and performance) and their

effects on the postulated mission are necessary to establish lower limit boundaries on the LSSM weights. For example, range reduction from 200 km to 150 km and provision of a separate power supply for scientific drilling results in a reduction of the Case I, LSSM Concepts of the order of 35%.

Power systems which have been considered are radioisotope-battery and fuel cell systems (open and closed cycle). The radioisotope and battery systems are desirable from the multiple mission usefulness and use in remote control operations prior to and after the manned mission. Shelter recharge of the battery radioisotope system was also examined, but is undesirable because of the dependency factors and the lack of clear interface definition at this date (for this reason the penalty associated with providing a recharge source at the shelter was also determined). Fuel cell systems, while not dependent on the individual sortie profiles, are nearly prohibitive because of the cryogenic tankage requirements, particularly if the six months storage is a fixed requirement. Problems are also foreseen in cryogen transfer on the lunar surface for multiple mission capability. Future efforts should concentrate on the use of radioisotope-battery systems and the shelter interface definition. Particular emphasis should be placed in the mission analysis to determine how these systems can be desensitized from specific sortie profiles.

Communications concepts vary, dependent on whether or not relay through the shelter to earth is used and the desired television frame rate for remote control. Based on the desirability of making the vehicle as independent as possible, it is recommended that the direct earth link be provided as well as communications with the shelter. This will avoid the complete loss of communications due to line-of-sight limitations or, when large obstacles are encountered in the traverse path, will provide the capability for complete freedom of usage in a remote mode before and after the manned mission, and enhance over-all system reliability.

Navigation concepts include a continuous survey technique and the dead-reckoning technique. Because of higher system time and weight penalties and difficulties in remote control for the surveying technique, the dead-reckoning system is recommended for incorporation into all LSSM concepts unless all operations are conducted with man present and within visual range of the shelter. Further studies are required to relate the navigation accuracy requirements to the over-all scientific mission to be performed.

If the vehicles are to be used in remote control mode, it will be necessary to include television and command and control capability. In any case the added crew safety and scientific benefits of continuous television transmission from the vehicle are well worth the power and weight costs.

Of the five candidate concepts for astronaut environmental control, the use of two standard Apollo-type PLSS units is recommended. Studies have indicated that the use of only two backpacks will not place severe restraints on the mission profile. Also, this concept follows the basic AES philosophy of maximum utilization of existing equipment. However, additional work is required to establish the degree of redundancy required for crew safety. Also, the water and expandables management between the shelter and surface operations must be analyzed in detail to determine optimum expenditure rates and schedules for crew activities.

The studies have shown that it is possible to effect thermal control through passive means. However, the design sensitivity to equipment arrangements and available view factors necessitate active loops for particular configurations.

SECTION 4

MOBILITY TEST ARTICLE (MTA) DESIGN

The Block I MTA is a dimensionally full scale model of the Bendix Lunar Surface Vehicle (LSV) mobility concept. It is designed to operate on an earth test course and provide engineering test data that can be easily and directly interpreted to assess the steady-state mobility performance of the LSV on the lunar surface. The mass scale of the Block I MTA with complete on-board driver station, driver, power supply, and recording equipment is approximately 1:5. By removing the on-board operation equipment and driving the MTA through an umbilical, the mass scale can be reduced to 1:6. By installing chassis re-enforcing structure, ballast support racks, and ballast, the MTA mass scale can be increased to 1:1.

Figure 4-1 presents the Block I MTA general arrangement featuring a basic chassis structure to which are mounted all the on-board equipments and driver station and to which are attached the wheel and suspension units. The power supply battery is mounted on a track to provide fine cg control in the longitudinal plane. Identified in this figure are the provisions for installing chassis roller extensions to simulate LEM/T unloading. The significant mobility system dimensions are scaled 1:1 to correspond with the selected Bendix LSV conceptual design. Table 4-1 presents the Block I MTA hardware tree to a sixth level breakdown.

Figure 4-2 presents the Block I MTA System electrical block diagram. Power in the range of 28 to 30 VDC is provided by a battery (silver zinc multiple cell recommended), and its distribution is controlled by the operator at the on-board driving station or through an external control connector. Power to the traction drive units for basic traction is controlled by applying a constant voltage to the four wheel drives. This is modulated by the steering commands to effect differential wheel speed bias during a turn. Power to the steering actuators is controlled by a position feedback servo system, set to insert wheel steering angle differential position as a function of steering angle command to effect Ackermann steering. Additional power is provided to operate instrumentation and communications equipment; its distribution controlled through the operator driving station.

REVISIONS				
LTR.	DESCRIPTION	ZONE	DATE	APPV'D
A	ENGINEERING RELEASE ER-1437-3		3-19-65	T.M.

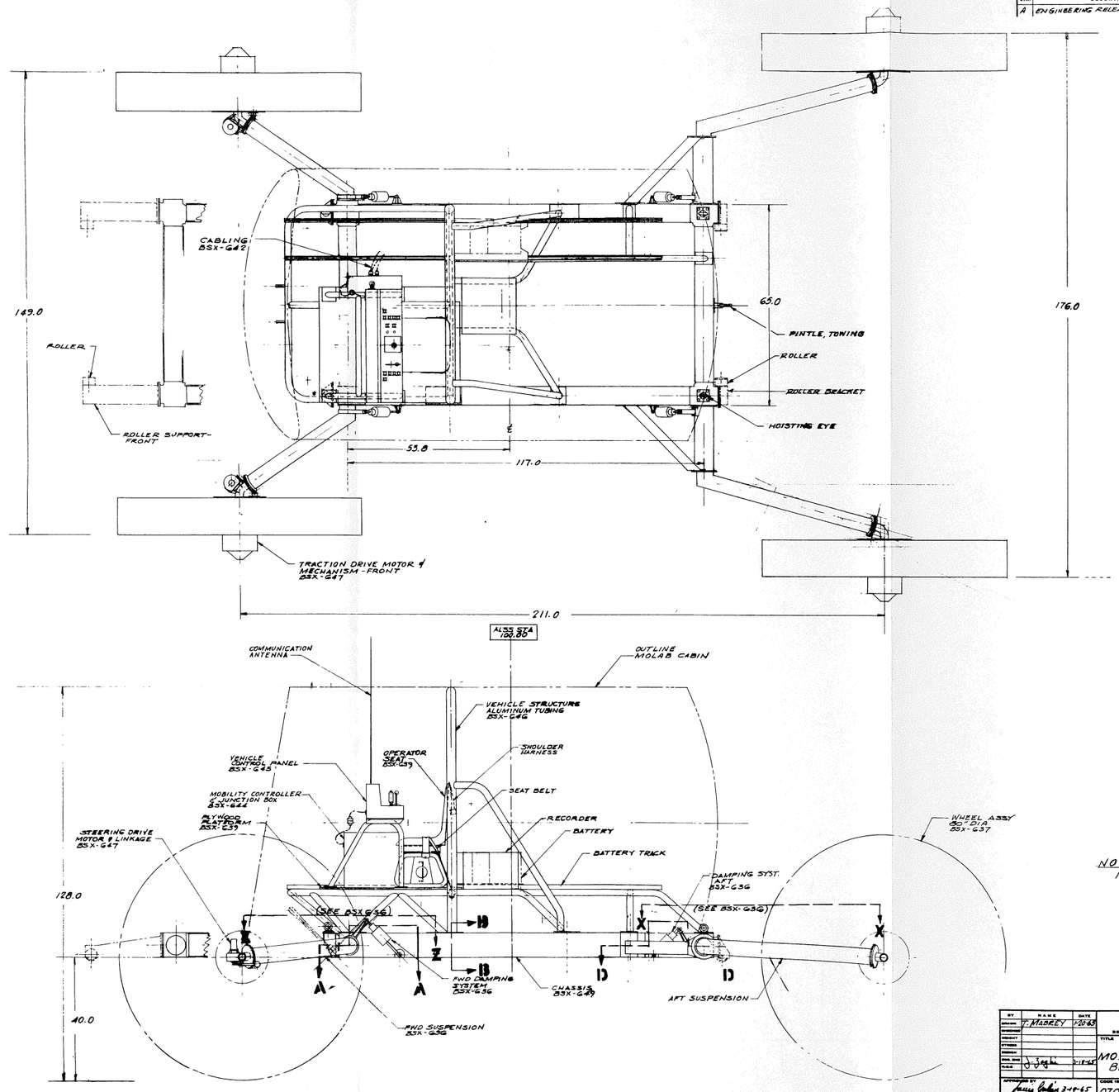

NOTE
1. SEE BSX-649 SHEETS 1 & 2 FOR ALL SECTIONS THRU CHASSIS

BY	NAME	DATE
DRAWN	T. MADREY	12-2-65
ENGINEER		
WEIGHT		
STRESS		
MATERIAL		
ENGL. DWG.		
CLASS		3-18-65
APPROVED BY		3-19-65
APPROVED BY		

THE Bendix CORPORATION
BENDIX SYSTEMS DIVISION - ANN ARBOR, MICHIGAN

TITLE: LAYOUT- MOBILITY TEST ARTICLE BLOCK I. - MOLAB

CODE IDENT. NO.	SIZE	DRAWING NUMBER
07038	J	BSX-634

SCALE 1/8 | WEIGHT | REV. | SHEET 1 OF 1

Figure 4-1 Block I MTA General Arrangement

TABLE 4-1

BLOCK I MTA HARDWARE TREE

Mobility Components

- Chassis
  - Primary structural frame
  - Hoisting eyes (4)
  - Pintle hooks (2)
  - Power supply support track
  - Bolt-on roller assembly
  - Operator station support
- Suspension and Deployment-Front
  - Wheel support arms (2)
  - Torsion bar assembly (2)
  - Hydraulic damper assembly (2)
  - Deployment assembly (2)
- Suspension and Deployment-Rear
  - Wheel support arms(2)
  - Torsion bar assembly (2)
  - Hydraulic damper assembly (2)
  - Deployment assembly (2)
- Wheels (4)
- Traction Drive and Brake Assembly (4)
  - DC motor
  - Planetary transmission
  - Epicyclic transmission
  - Electromechanical clutch
  - Blower assembly
  - Axle
  - King-pin support-front only
  - Bearing assembly
  - Electromechanical brake assembly
  - Power and control relay
  - Tachometer
- Steering Drive Mechanism Assembly (2)
  - DC motor assembly
  - Epicyclic transmission
  - Steering linkage
  - Potentiometer
  - Bearing assembly
- Dynamic Brake Radiators (4)
  - Load resistor
  - Radiator
- Mobility Controller
  - Pulsewidth modulator - traction
  - Pulsewidth modulator - steering

Auxiliary Components

- Operation Station
  - Seat
  - Safety harness
  - Wind screen
  - Control pedestal
  - Controls and displays
  - Communications equipment
- Power Supply
  - Battery
  - Regulator
  - Wiring harness
- Instrumentation
- Data Acquisition
  - Recorder
  - Signal conditioning

GSE

- Battery charger
- Hydraulic jacks
- Fork lift (2000 lb)
- Tranceivers
- Tape recorder
- Cameras
- Umbilical cables

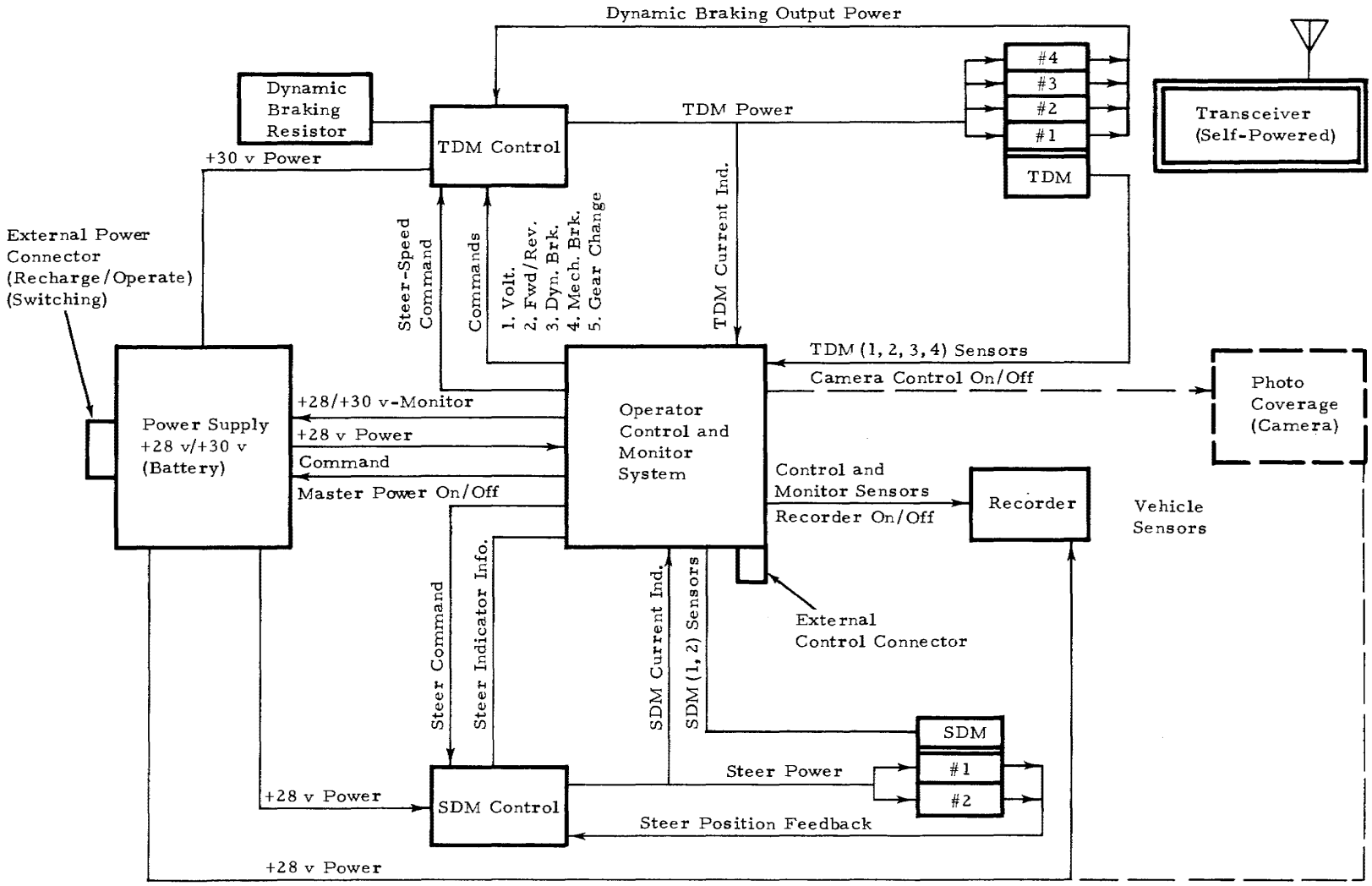

Figure 4-2 Block I MTA System Electrical Block Diagram

Table 4-2 presents the Block I MTA mass breakdown. The mass ratio which results is 1:5 and is based on an LSV which features the following maximum mass properties:

Basic LSV fully fueled	6450 lb (2930 kg)
Two astronauts with backpacks	640 lb (290 kg)
LFV structural penalty	185 lb (84 kg)
LFV fully fueled	970 lb (446 kg)
Total LSV Mass (max)	8245 lb (3750 kg)

The main objective of the Block I MTA is to provide engineering test data while operating on an earth test course that can be readily and directly interpreted to assess the steady-state mobility performance of the Lunar Surface Vehicle prototype. Ideally, the steady-state lunar mobility performance such as obstacle and slope negotiation and soft soil traction can be duplicated on earth on a 1:1 scale course using the identical traction drive mechanism of the LSV, if the mass scale is maintained at 1:6. In practice, however, such a small mass scale is difficult to achieve if other test operation features such as on-board driver and power are to be retained. The approach which is proposed is to accept a higher mass ratio and upgrade the traction drive mechanism design to provide higher torques than its LSV prototype such that a 1:1 scale course can be negotiated.

The Block I MTA performance estimates on a 1:1 scale test course compare with its LSV prototype. Due to a much lower cg than the LSV, the lateral stability of the Block I MTA will be greater and data suitable for interpretation must be adjusted accordingly. Specific energy consumption of MTA will be greater than that of the LSV due to its larger torque requirements resulting from an increase in axle loads. Since the mass of the MTA is less than that of the LSV and its suspension system spring constant larger, the natural frequencies of the MTA will be larger than those of the LSV. The Block I MTA is not suitable for evaluating the LSV dynamic performance. In addition to the performance parameters, the Block I MTA will, by virtue of its lower mass and higher torque capacity, exhibit much higher acceleration and braking performance on hard level surfaces than its LSV prototype.

TABLE 4-2

MTA MASS BREAKDOWN

	Mass	
	kg	lbm
Chassis	99.8	220
Suspension and Deployment	71.7	158
Wheels	217.6	480
TDM	127.0	280
SDM	22.6	50
Power Supply	46.4	102
Operator Station and Controls	44.5	98
Instrumentation and Data Handling	41.3	91
Operator	77.1	170
TOTAL	748.0	1649

In every instance, data analysis of test results must be performed to assure the correct interpretation of the corresponding LSV performance. Of particular concern are such difficult factors to scale and measure as the soil parameters. Also, the geometric interface between the wheel and the soil may have a significant effect on the soil thrust efficiency factor. Thus, MTA test data must be supplemented with calibrated wheel soil data conducted under laboratory controlled conditions.

A detailed coverage of the MTA Block I design is presented in Volume IV. This document also provides the results of scaling model studies and discusses the various hardware approaches to obtaining the desired "steady-state" and "dynamics" parameters of the LSV.

SECTION 5

MOLAB RESOURCES PLAN

The ALSS Payload Study included a resources analysis for the development of the MOLAB System. The scope of the MOLAB System Development is best seen by placing it in the perspective of the NASA Phased Programming as shown in Figure 5-1. Major tasks and resulting (output) development items (software and/or hardware) were identified for each function (management and design, manufacturing, quality, and test.) For each of these functional work packages, a task description and estimated timing and cost were developed.

The master schedule, Figure 5-2, shows the sequence and timing for the major tasks and hardware development items associated with each major task. The time span represents a realistic period without optimism or pessimism. The figure identifies the schedule period of the five distinct subphases. It also identifies critical hardware evaluation periods and contractor evaluation periods during the over-all project. In this figure, the design, build, test, and evaluation of each hardware development item are scheduled as are the software (mainstream) development items.

The supporting development period could conceivably overlap into the Phase D-1 subphase. However, this would very likely cause delay in defining the system sufficiently to proceed with the planned development in all areas and, consequently, reduce the cost effectiveness of the over-all project plan.

The contractor development period of 38 months (from start of Phase D-1 until delivery of demonstration units) is the heart of the development project. Within this period, the Thermal Radiation Test Article poses the most critical design problem, while the Electrical Integration/Configuration Integration test articles pose the most complex and time-consuming evaluation problem.

The over-all test program is shown in Figure 5-3. For each of the 31 mockups, test articles, and/or prototypes, the test requirements are specified. The code identifies the recommended facility, contractor or Government, which satisfies test requirement.

There are numerous ways to break down the price of the MOLAB Development Project, depending on the experience and interest of the reader. The first method to be discussed is by the basic formulation or approach, that being in the three different axes of the cost structure. These are respectively: by function, by hardware subsystems, and by subphases and development items.

Pricing by function is shown in Table 5-1. Pricing by major hardware subsystems is shown in Table 5-2. Unless specifically identified under vehicle GSE, special test equipment includes all factory handling equipment, special tools, assembly jigs and fixtures, special test equipment including jigs, transportation equipment, and handling equipment for more than one end item. Special test equipment (tooling, etc.) applicable to only one specific end item is included as part of the end item cost.

Figure 5-4 shows the development subphase pricing. The mainstream costs, or software, consist of the design elements. Design costs applicable to a specific hardware development test article are included in the specific test article cost.

The R&D fiscal funding required for development of the MOLAB system is shown in Figure 5-5.

The acquisition and operational phase includes procurement of the operational hardware, installation and checkout, flight and mission completion. Budgeting costs for delivery of the contractor-furnished hardware and services are shown in Figure 5-6.

TABLE 5-1

PRICING BY FUNCTION

Design and Management	113.7M	36.6%
Manufacturing	131.5	42.3
Test	51.4	16.6
Quality and Reliability	14.0	4.5
Total	310.6M	100.0%

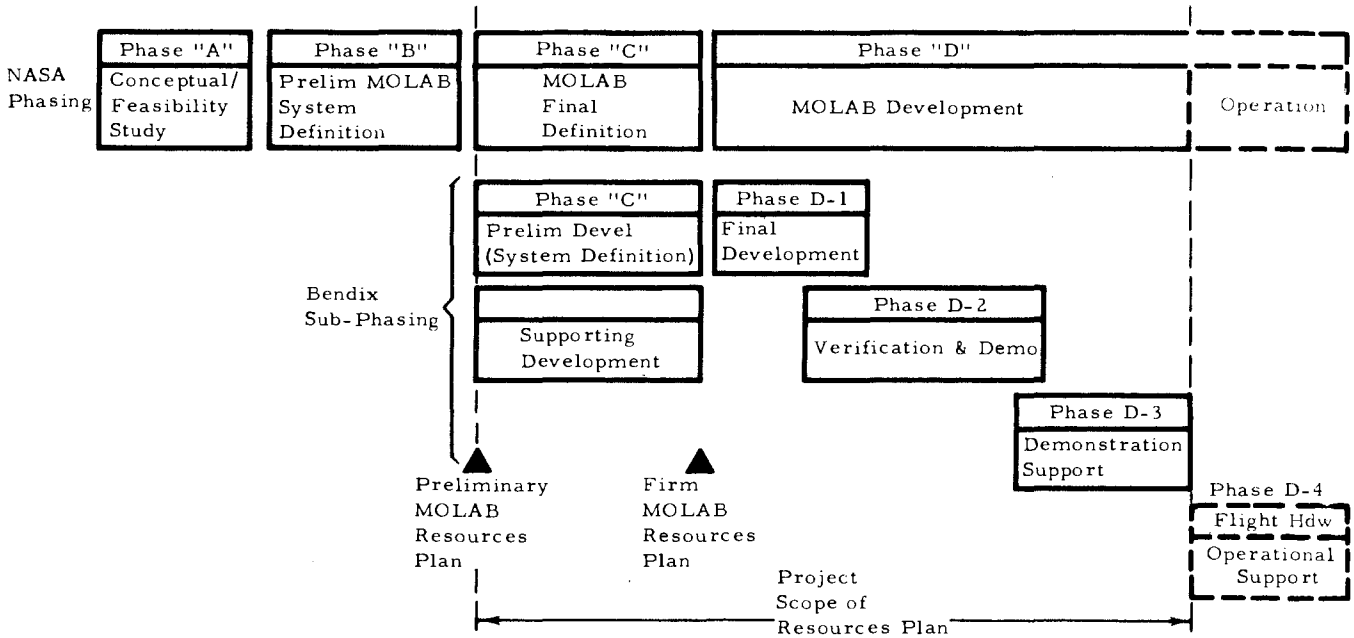

Figure 5-1 NASA Phased Programming

TABLE 5-2

PRICING BY MAJOR HARDWARE SUBSYSTEMS

Project Mgt. & Integ. (Prime)	50.6M	16.3%
Cabin System	83.3M	26.8%
Mobility System	50.8M	16.4%
Power System	42.7M	13.8%
Astrionics Systems	37.0M	11.9%
Tiedown and Unloading	3.8M	1.2%
OGE	6.5M	2.1%
Vehicle GSE	29.0M	9.3%
Special Test Equipment	6.9M	2.2%
Total	310.6M	100%

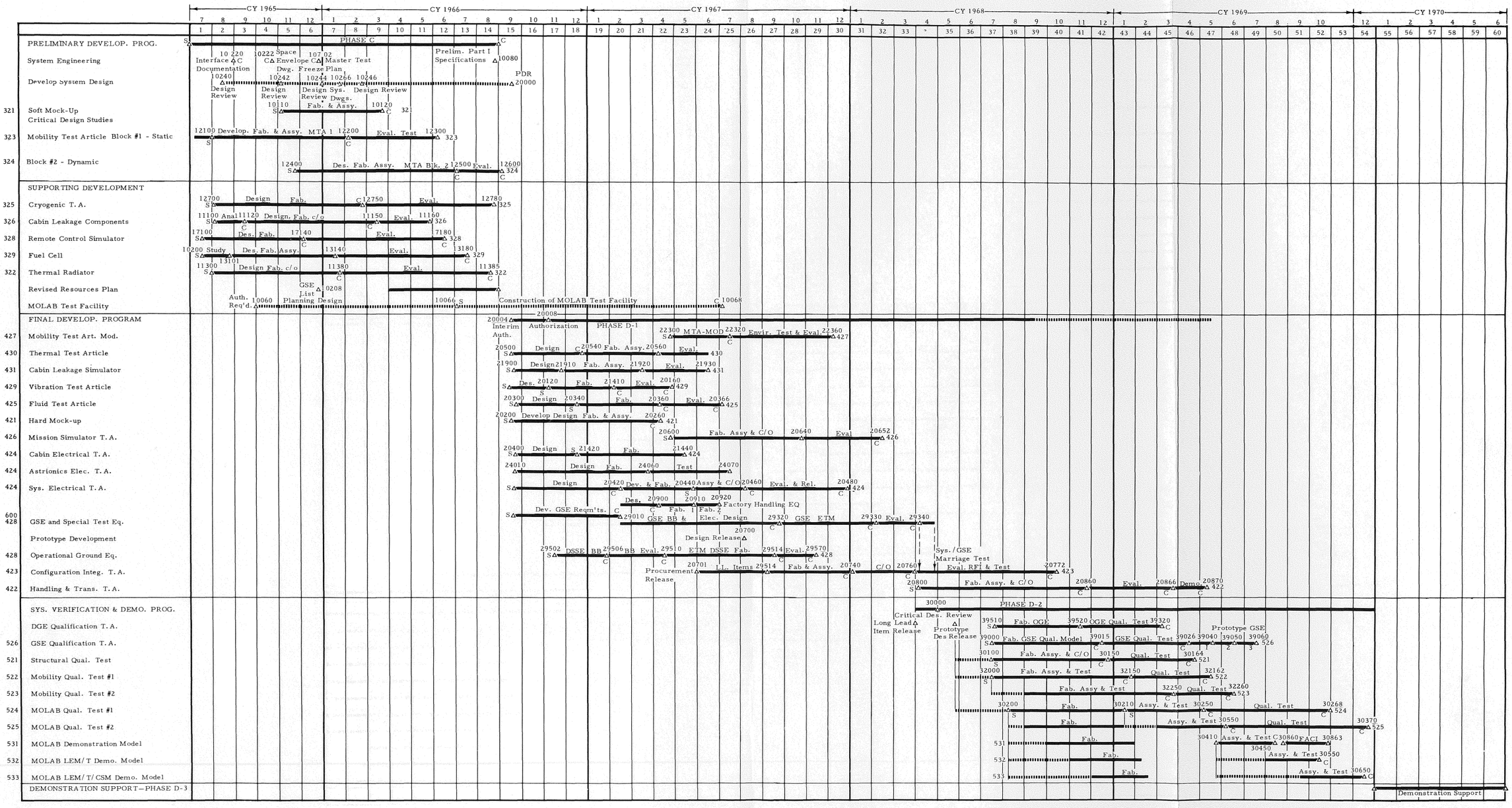

Figure 5-2 Master Schedule

	Soft Mock-up 321	Thermal Rad TA 322	MTA #1 Static 323	MTA #2 Dynamic 324	Cryog Storage TA 325	Cabin Leakage Comp. TA 326	Remote Control Sim. TA 328	Fuel Cell TA 329	Lower Level Demo 320	Cabin Leakage Sim. TA 431	Hard Mock-up 421	Handling Trans. TA 422	Config. Integ. TA 423	Elect. Integ. TA 424	Fluid Integ. TA 425	Misc. Sim. TA 426	Mobil TA Mods. 427	Lower Level Critical Demo 428	Vibration TA 429	Thermal Development TA 430	Structural Test 521	Mobility Qual. Mod. #1 522	Mobility Qual. Mod. #2 523	MO-LAB Qual. Mod. #1 524	MO-LAB Qual. Mod. #2 525	GSE Qual. TA's 526	Lower Level Critical Demo 527	MOLAB DEMOS 531-532-533	OGE Equip. 534
EVALUATION	B										B																		
BREADBOARD									B																				
FUNCTIONAL		L	B	B	B		B	B	B&L	L		B	B	B	B	B	B	B&L	B	B		B	B	B	B	B	B & L	B	B
TEMPERATURE		L						B																	N-1				
SOLAR RADIATION		L																							N-1				
VACUUM		L								L															N-1				
THERMAL-VAC.		L			B			B												N-1					N-1				
VIBRATION																			B		B			N-2		B		B	
EMI/RFI									(ENTIRE INCIDENTAL TESTS AS REQUIRED)				B	B		B		(ENTIRE INCIDENTAL TESTS AS REQUIRED)						B	B	B	(ENTIRE INCIDENTAL TESTS AS REQUIRED)	B	B
MASS DATA			B	B									B			B	B					B	B	B				B	
ACCELERATION																					N-3			N-3					
SHOCK																					B			B		B			
MOBILITY			B	B													N-6					N-6	N-6						
PRESSURE						L				L			B								B					B			
REMOTE CONTROL							B																						
CRYOGENIC					B								B		B														
SHIPPING												B & N-7																	
SCIENTIFIC MISSION																N-8													
STRUCTURAL																					B					B			
ACOUSTIC																					N-4			N-4					
OFF-LIMITS																								B	N-1				
REACTION CONTROL																								N-5					
COMPATIBILITY																										B			B
	!																												

FACILITY CODE

B BENDIX CORP.
L LOCKHEED MSC

N-1 NASA/MSC CHAMBER A
N-2 NASA/MSFC HUD VIBR. FAC.
N-3 NASA/AMES ROTARY ACCEL.
N-4 NASA or AF/WADC ACOUSTIC FAC.
N-5 AF/AEDC MARK I CHAMBER
N-6 NASA MOBILITY TEST LAB.
N-7 NASA/MILA
N-8 NASA REMOTE TEST SITE

ALSS-B-019-465

Figure 5-3 Over-All Test Program

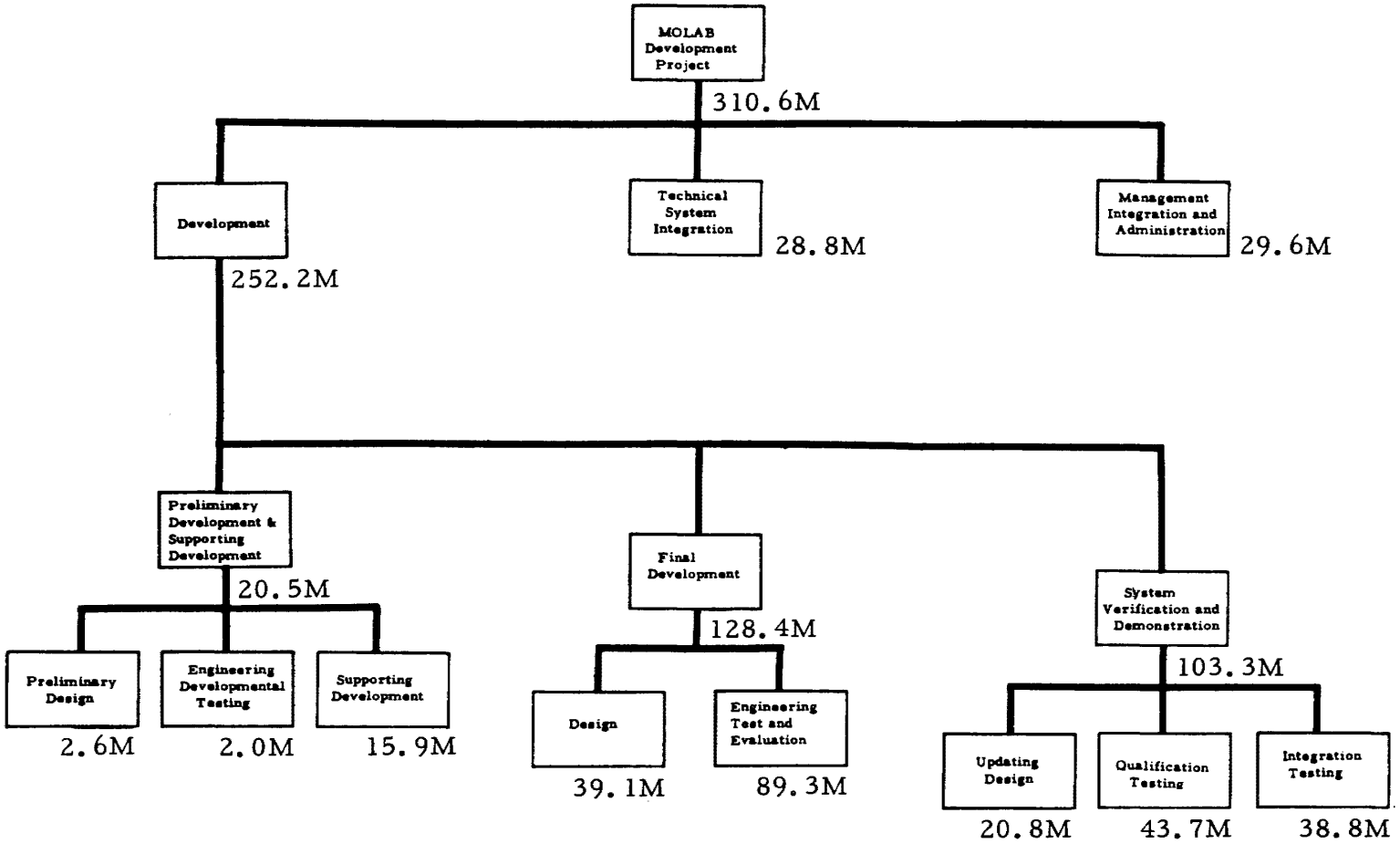

Figure 5-4 Development Subphase Pricing

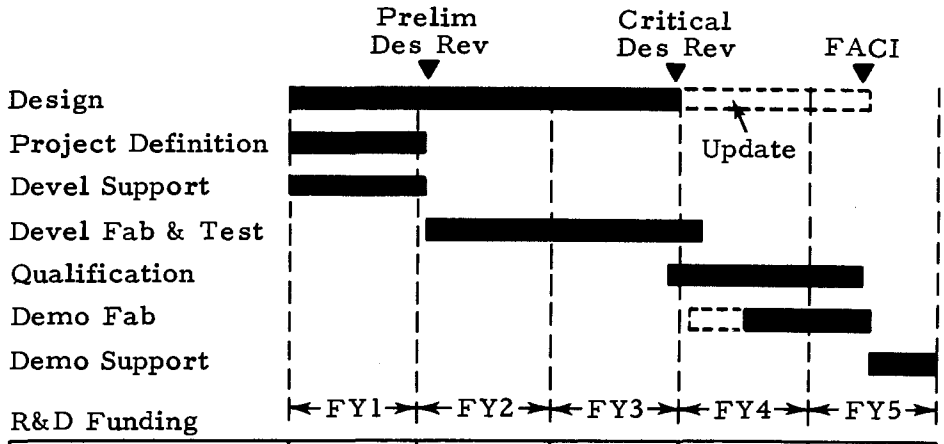

	FY1	FY2	FY3	FY4	FY5
Fiscal Funding	34M	99M	67M	67M	43.6M
Cumulative	34M	133M	200M	267M	310.6M

Figure 5-5 R&D Fiscal Funding

(MOLAB Vehicle Average Cost of 3 Integration Testing Units-8183)

MOLAB Vehicles	#1	7856	
Projected Costs	#2	7680	
From 8183	#3	7561	
	#4	7473	
	#5	7403	
Total (5 units)		37,973	

MOLAB Vehicle per Flight Cost (4 flights and 1 spare) $\frac{37,973}{4}$ = 9493

Product improvement 949

15% spares per MOLAB Vehicle 1424

DSSE (2 stations) = 2,480 (1 station supplied during Phase D-3)

Spares = 400

Total 2,880

DSSE amortized over 4 flights = 720

MSCCE supplied during Phase D-3 = 0

MSCCE spares only 54 amortized for 4 flights = 14

MILA Field Services 1st flight 360

Each additional 280

4 flights total = 1200 amortized/flight = 300

MSCCS Field Services per Flight = 100

DSS Field Services per Flight (3 stations) = 225

Total per Flight Cost (amortized over 4-flight program) 13,225

Figure 5-6 Acquisition and Operational Cost Data
(Dollars in Thousands)

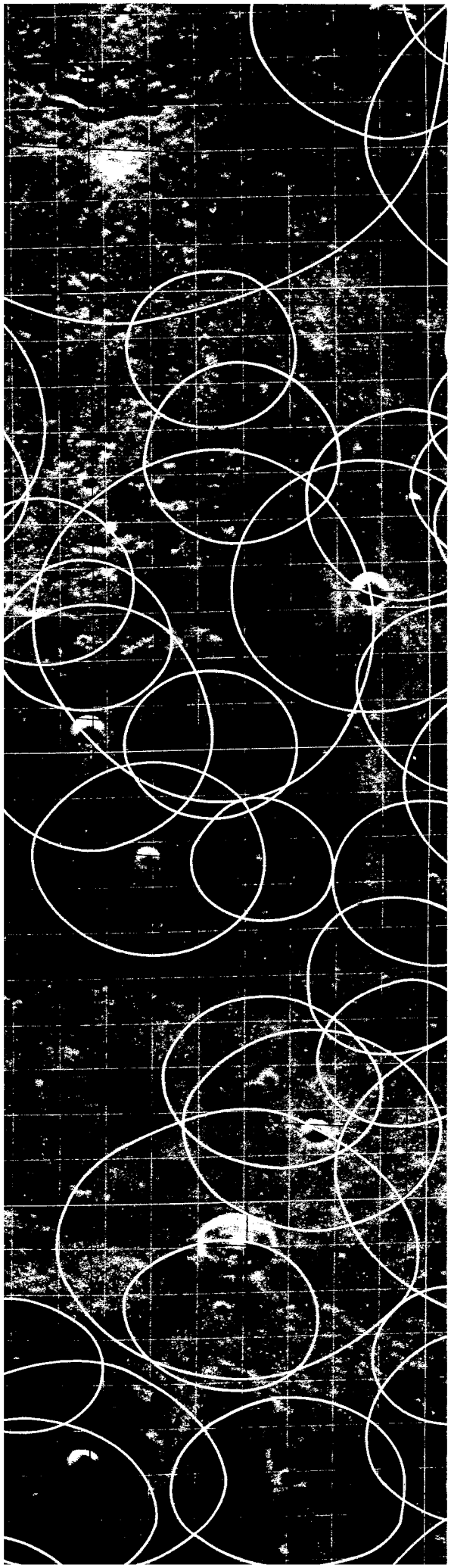

APOLLO LOGISTICS SUPPORT SYSTEMS PAYLOADS ... PRELIMINARY DESIGN STUDY

Bendix . . .

where ideas unlock the future